www.hammeroc.com

HR35AT

Operation Maintenance

Manual & Part List

HAMMEROC Corp.

Operation

Maintenance

Manual & Part List

HR35AT

HAMMEROC Corp.

OPERATION 4

1. Foreword 5
   1.1 Preface 5
   1.2 Important safety information 5
   1.3 Warranty 7
2. Product instruction 8
   2.1 Model and serial number 8
   2.2 Main parts 9
3. Operation 10
   3.1 Operating instructions 10
   3.2 Mounting and dismounting the hammer 17
   3.3 Setting of operating pressure 18
   3.4 Operating temperature 19
   3.5 Storage 19

LUBRICATION 20

1. Hammer tool greasing 21
   1.1 Recommended greases 21
   1.2 Technical data 21
   1.3 Manual lubrication 21
   1.4 Automatic lubrication 23
2. Hydraulic oil 24
   2.1 Requirements for hydraulic oil 24
   2.2 Oil cooler 26
   2.3 Oil filter 26

MAINTENANCE 28

1. Routine maintenance 29
   1.1 Overview 29
   1.2 Maintenance intervals 29
   1.3 Other maintenance procedures 30
2. Removal of tool 31
3. Changing tool bushing 33
4. Removal and installation of hammer assembly 35
5. Accumulator 36

6. Charging accumulator 39
7. Removal and installation of main spool 40
8. Removal and installation of oper. valve 41
9. Removal and installation of flow valve 43
10. Loosening and tightening side rods 45
11. Disassembling and assembling cylinder 46
12. Connections 47
13. Torques 48
14. Service tool list 49
15. Grease pump 50

TROUBLE SHOOTING 51

1. Hammer does not start 52
2. The hammer operates irregularly but the blow has full power 53
3. Hammer operates poorly and blow has no power .....
4. Impact rate slows down 54
5. Oil overheats 55

SPECIFICATION 56

1. Hammer specification 57
   1.1 Main dimensions 57
   1.2 Technical specifications 58
2. Tool specification 59
   2.1 Tool specification 59

PART LIST 60

1. Housing 61
2. Hammer 63

OPERATION

1. FOREWORD

1.1 PREFACE

Congratulations on having purchased this product. A properly installed attachment should prove to be a productive machine requiring maintenance at only regular intervals.

1.2 IMPORTANT SAFETY INFORMATION

Do not use or install the breaker until you can use the carrier.
Do not rush when you are learning to use the product. Take your time and most importantly, take it safety. If there is anything you do not understand, contact your HAMMEROC dealer. He will be pleased to advise you.

Improper operation, lubrication or maintenance of this machine can be dangerous and could result in injury.

Do not operate this machine until you read and understand the instructions in this manual.

Do not perform any lubrication and maintenance until you read and understand the instructions in this manual.

Manual

Read this manual before installing, operating or maintaining the breaker. If there is anything you don't understand, contact your HAMMEROC dealer to explain it.

Clothing

You can be injured if you do not wear proper clothing. Loose clothig can get caught in the machinery. Wear protective clothing to suit the job.
For example : safety helmet, safety shoes, safety glasses, well-fitting overalls, ear-protectors, and industrial gloves. Keep cuffs fastened.

Care and alert

All the time you are working with the hammer, take care and stay alert. Always be careful. Always be alert for hazards.

Lifting equipment

You can be injured if you use faulty lifting equipment.
Make sure that lifting equipment is in good condition. Make sure that lifting tackle complies with all local regulations and is suitable for the job. Make sure that lifting equipment is strong enough for the job and you know how to use it.

Accumulator

The accumulator is pressurized even when there is no hydraulic pressure in the breaker. Attempting to dismantle the accumulator without first releasing the pressure can cause serious injury.

Hydraulic pressure

Hydraulic fluid at system pressure is dangerous. Before disconnecting or connecting hydraulic hoses, stop the carrier engine and operate the controls to release pressure trapped in the hoses. Keep people away from the hydraulic hoses during breaker operation.

Regulation and laws

Obey all laws, work site and local regulations which affect you and your equipment.

1.3 WARRANTY

The customer is provided with a separate warranty sheet, where the export warranty terms are explained. Check always that this warranty sheet is provided with the attachment. If not, contact your HAMMEROC dealer.

WARRANTY CLAIM REPORT

A warranty claim report card is filled out after the installation inspection by the dealer and a copy of it is sent to the manufacturer. This card is very important because no warranty claims are handled without it. Make sure that you get a copy of it after the installation inspection and that it is correctly filled out.

2. PRODUCT INSTRUCTION

2.1 MODEL AND SERIAL NUMBER

The serial number is stamped on the valve housing and housing.
It is important to make correct reference to the serial number of the attachment when making repairs or ordering spare parts. Identification of the serial number is the only proper means of maintaining and identifying parts for a specific product.

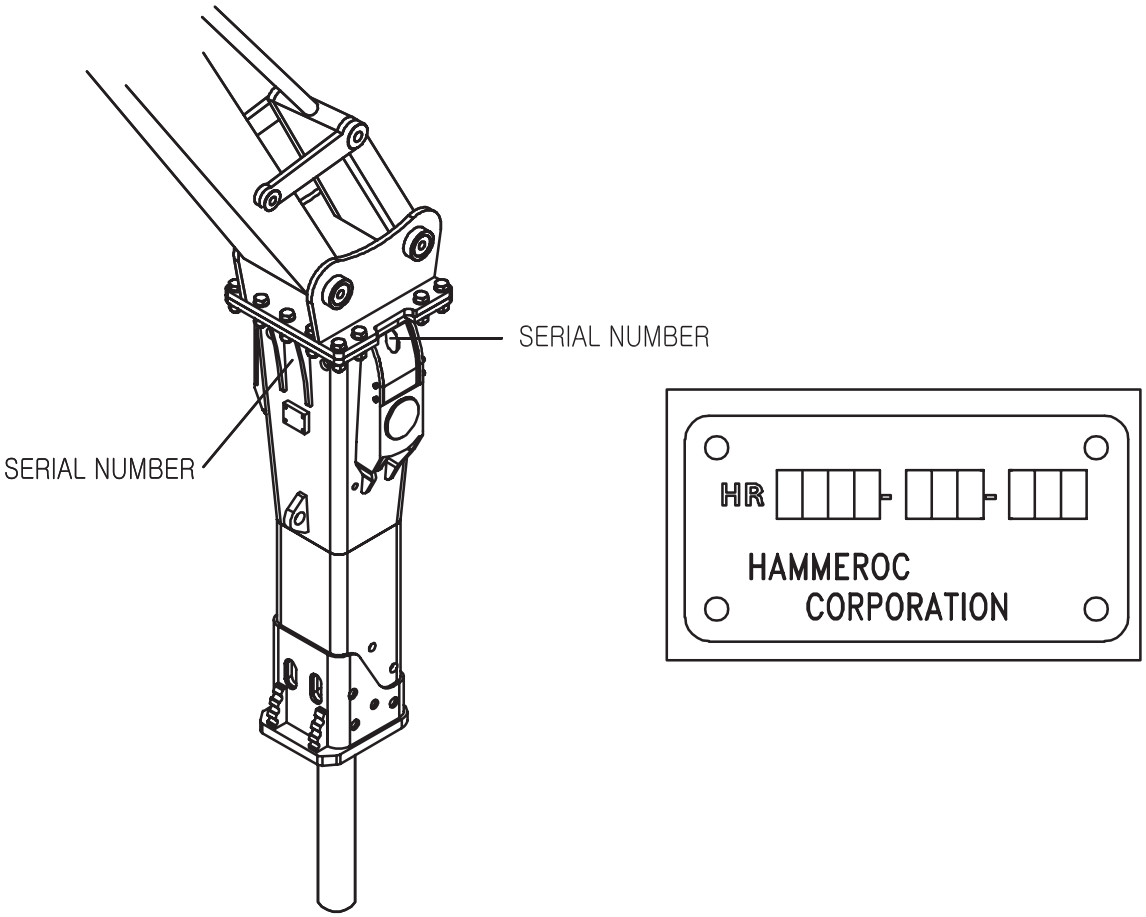

2.2 MAIN PARTS

The main parts of the hammer are shown below.

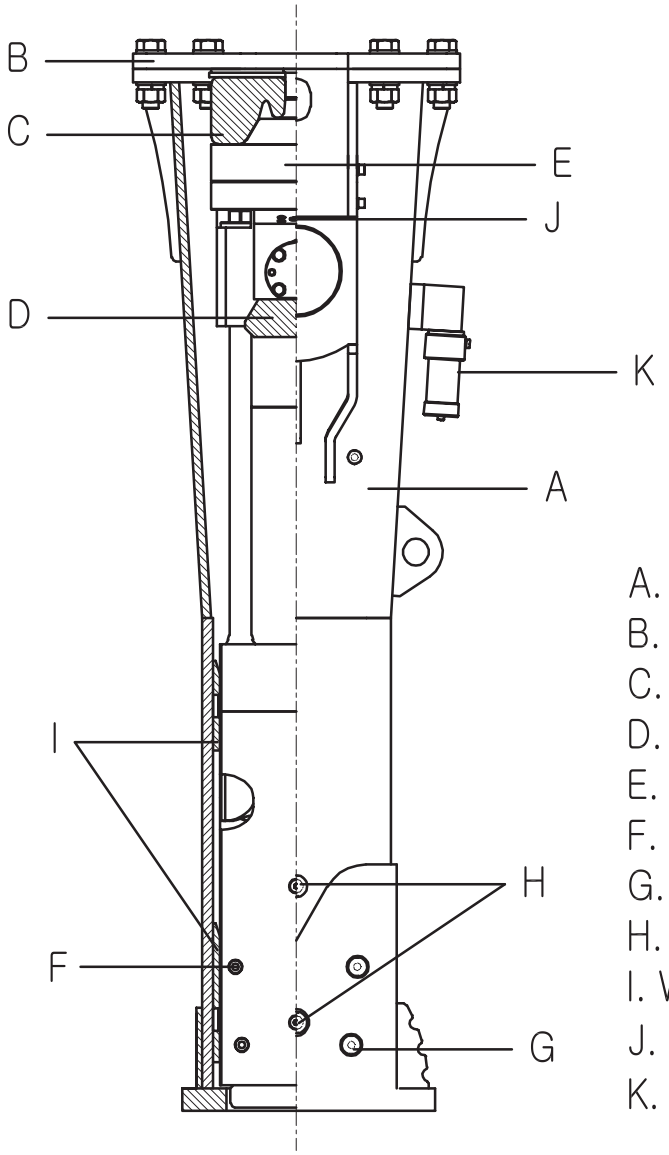

A. Housing
B. Top cover plate
C. Top buffer
D. Side buffer
E. Accumulator
F. Tool pin retain
G. Tool bushing retain
H. Grease nipple
I. Wearing plates
J. Hose connection (in & out)
K. Grease pump (Optional)

3. OPERATION

3.1 OPERATING INSTRUCTIONS

PRINCIPLE OF BREAKING

To increae the working life, pay particular attention for correct working methods and how to choose the correct tool for the job. There are essentially two ways of breaking with a hydraulic hammer.

Penetrative breaking (or cutting)

In this form of breaking a moil point or chisel tool is forced inside the material. This method is most effective in soft, layered or plastic, low abrasive material. The high impact rate of the small hammers makes them ideal for penetrative breaking.

Impact breaking

With impact breaking, the material is broken by transferring very strong mechanical stress waves from the tool into the material. The best possible energy transfer between the tool and the object is achieved with a blunt tool. Impact breaking is most effective in hard, brittle and very abrasive materials.
The use of a chisel tool is hard material will cause the sharp edge to wear very quickly.
The high impact energy of the big hammers makes them ideal for impact breaking.

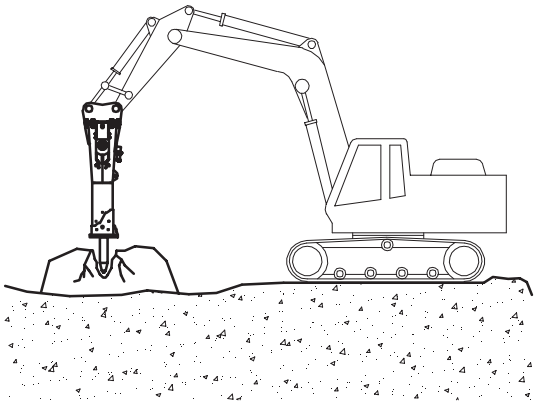

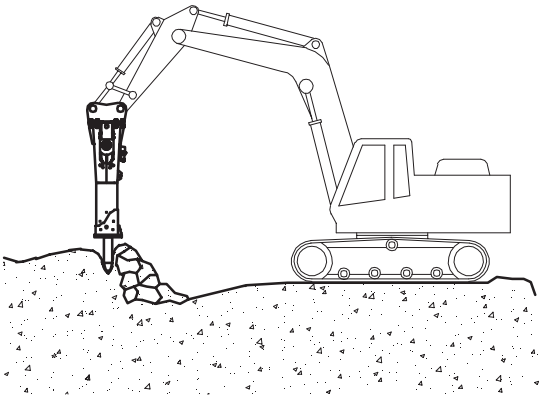

CHOOSING TOOLS

A selection of tools to suit each application are available. The correct type of tool must be selected to get the best possible working results and longest life time for the tool. Choosing the best tool type for an application may require some testing, please consult with your HAMMEROC dealer.

Chisel, Cone, Moil

- For sedimentary (e.g. sandstone) and weak metamorphic rock into which the tool penetrates
- Concrete
- Trenching and benching

Blunt

- For igneous (e.g. granite) and tough metamorphic rock (e.g. gneiss) into which the tool doesn't penetrate
- Concrete
- Breaking boulders

DAILY OPERATION

Warning! Protect yourself and your neighborhood against flying chips of rock.
Do not operate the hammer or carrier if someone is too close to the hammer.
The hammer as a standard assembly, must not be used underwater. If water fills the space where the piston strikes the tool, a strong pressure wave is generated and the hammer may be damaged.

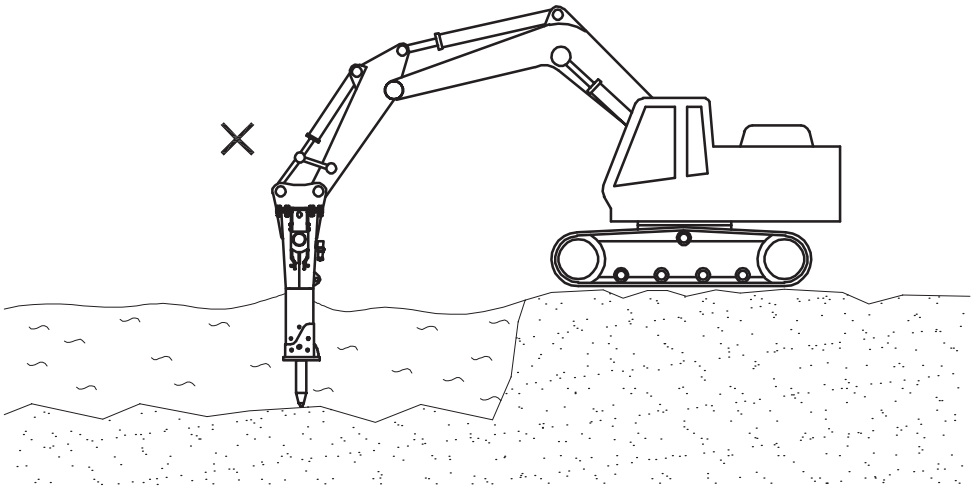

1. Prepare the carrier for normal excavation work. Move the carrier to the required position. Set the drive to neutral.
2. Set the engine speed to the recommended engine RPM.
3. Carefully operate the carrier controls to place the hammer and boom into the breaking position. Quick and careless boom movements could result in damage to the hammer.

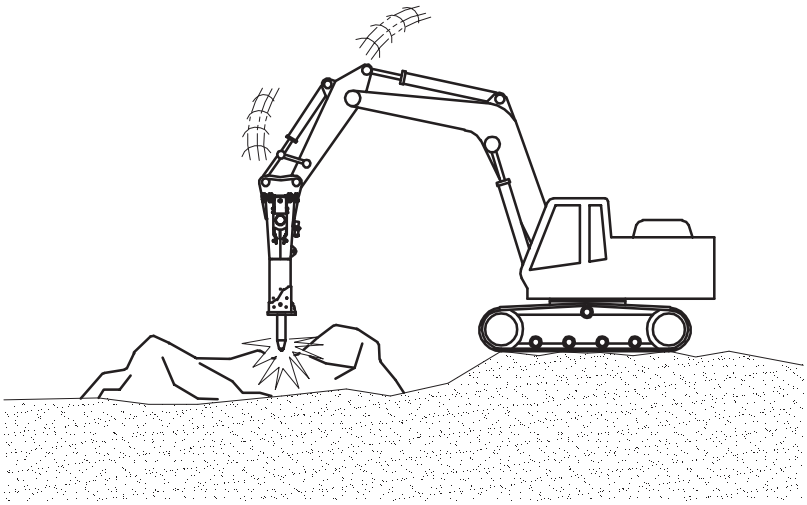

4. Use the excavator boom to press the hammer firmly against the object. Do not pry the hammer with the boom. Do not press too hard or too gently with the boom. The correct force is applied, when the tracks start to lift slightly from the ground.

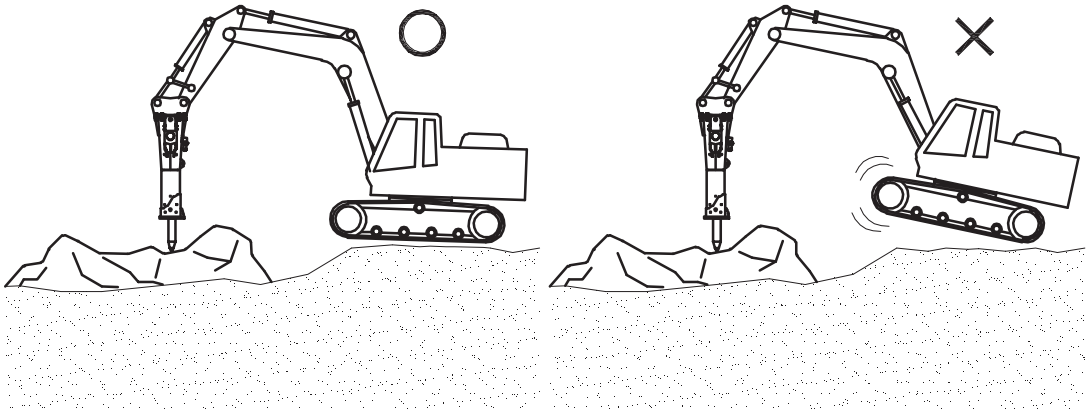

5. Place the tool against the object at a 90 degree angle. Avoid small irregularities on the object which will break easily and cause either idle strokes or an incorrect working angle.

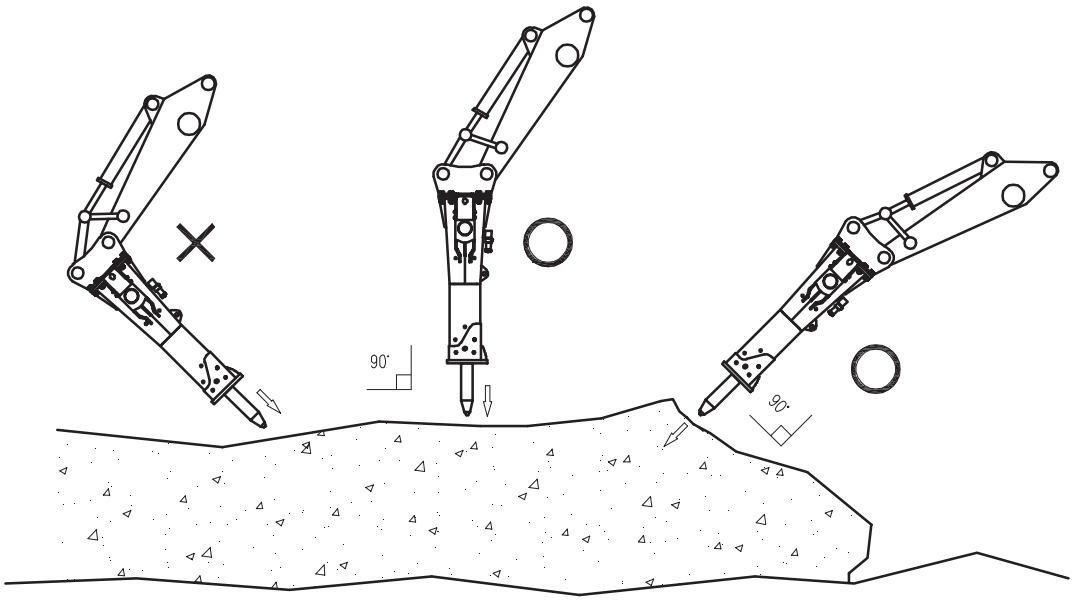

6. When demolishing vertical structures (e.g.brick walls), place the tool against the wall at a 90 degree angle.

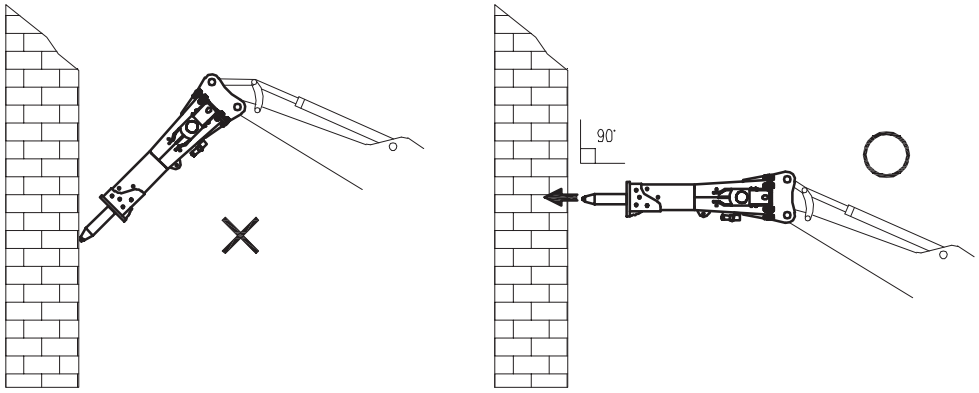

7. Start the hammer.

8. A safety screen is recommended to protect the operator from flying debris.
   Keep the cabin windows and doors closed during operation.

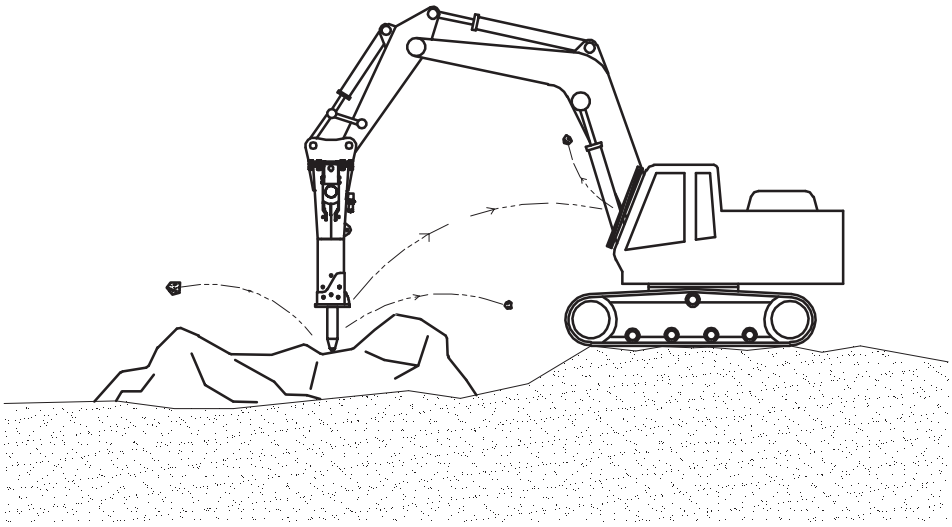

9. Note : Listen to the hammer's sound when you are using it. If the sound becomes thinner and the impact less efficient, the tool is mis-aligned with the material and/or there is not enough dowm force on the tool. Realign the tool and press the tool firmly against the material.

10. Do not strike in one spot for more than 15 seconds at a time. If the object does not break, or if the tool does not penetrate, stop the hammer and change the position of the tool.

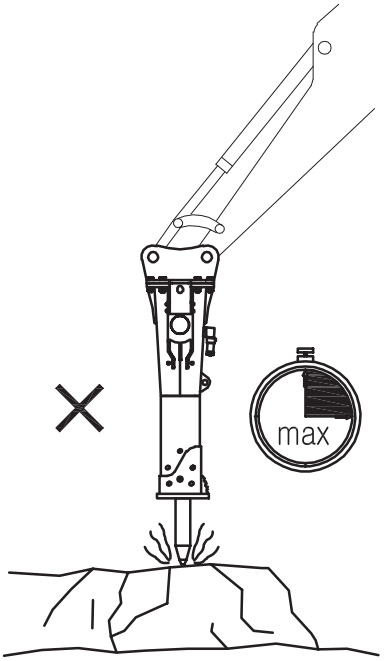

11. Stop the hammer quickly, when the object starts to be brokekn. Do not allow the hammer to fall down and make idle strokes when an object breaks. Frequent idle strokes have a deteriorating effect on the hammer.
If the hammer falls through, the housing wears out more quickly.

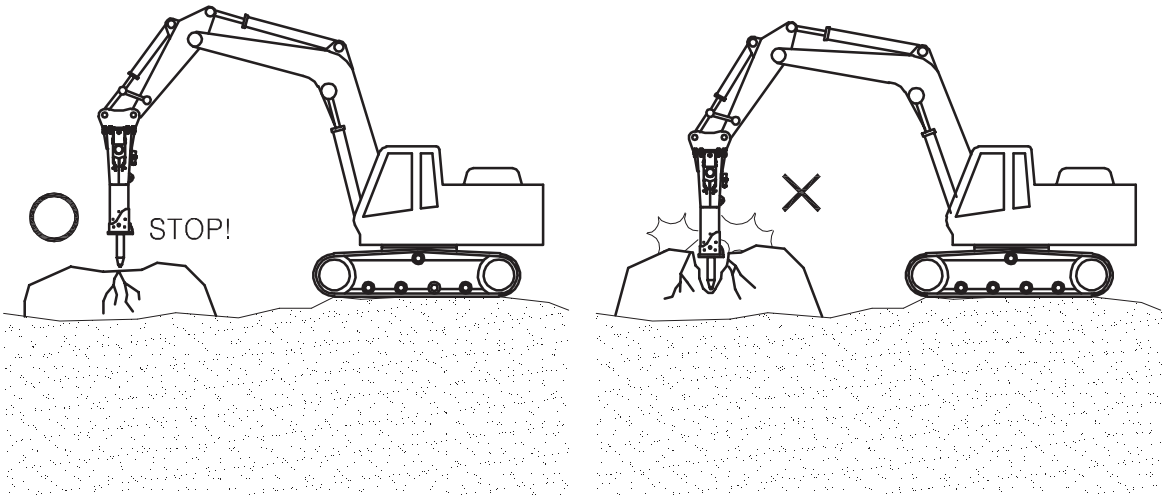

12. When breaking concrete, hard or frozen ground, never strike and pry with the tool at the same time. The tool may snap off. Bending may be caused by stones inside hard or frozen ground. Be careful and stop striking if you find sudden resistance under the tool.

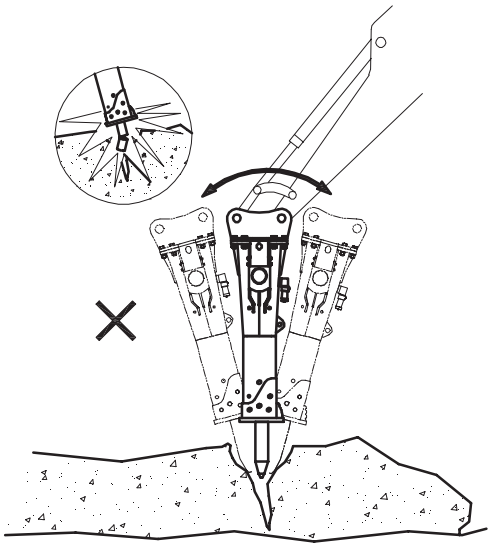

13. Do not operate the hammer with the carrier's boom stick or bucket cylinders at the end of their stroke (either fully extended or fully retracted). Damage to the carrier may result.

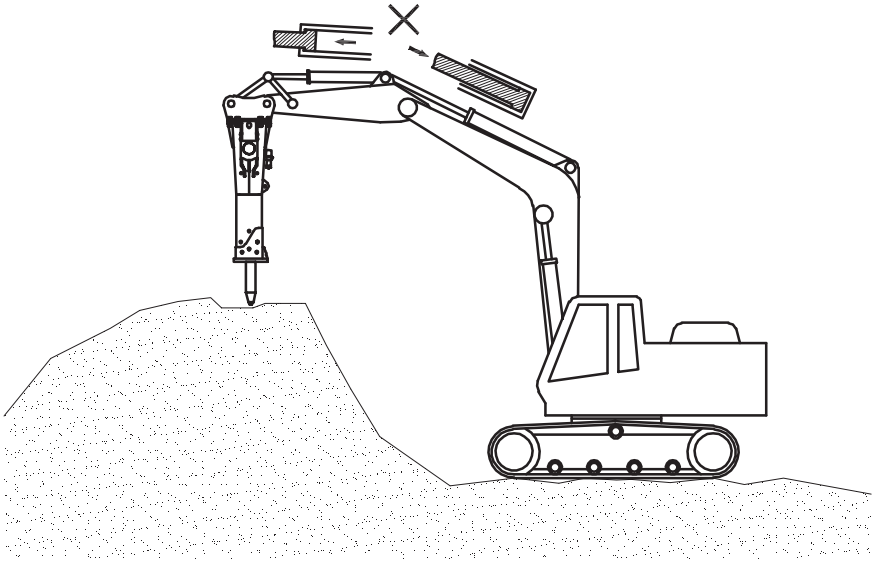

3.2 MOUNTING AND DISMOUNTING THE HAMMER

REMOVAL FROM CARRIER

Warning! The hammer must be secured from rolling over when disconnecting from the carrier. Only use skilled operator to position carrier for hammer removal.
Warning! Hydraulic pressure inside hammer must always be released before opening hose connection!

1. Position hammer horizontally on the floor and remove the tool.
2. Stop carrier engine. Operate boom and hammer controls to release pressure trapped inside hoses. Wait ten minutes for oil pressure to drop.
3. Close hammer inlet and outlet lines. If quick couplers are used, disconnection automatically closes hammer lines.
4. Disconnect hoses. Plug the hoses and the hammer inlet and outlet ports.
5. Remove mounting pins and other parts.
6. The carrier can be moved aside.

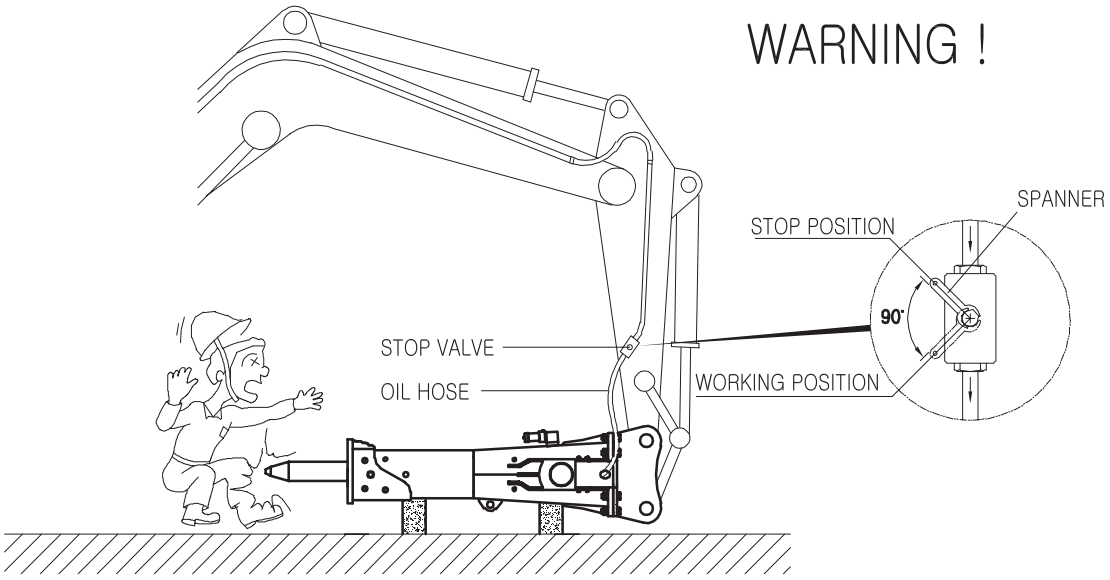

INSTALLATION

1.Install hammer in the same way as mounting a bucket. Install bucket pins.

2. Connect hoses. Hammer inlet port is marked on the valve housing with "IN" and outlet port with "OUT".

3. Open hammer inlet and outlet lines.

3.3 SETTING OF OPERATING PRESSURE

OPERATING PRESSURE

1. Stop the carrier engine. Assemble the high pressure gage to the high pressure measuring port.

2. Start the engine. Set the tool of the breaker e.g.on a thick steel plate. Adjust operating engine revolution and start to operate the breaker.

3. Read the average pressure from the high pressure gage operating pressure.

4. Operating pressure is pre-adjusted at the factory and there should be no reason to adjust it.

5. Stop the carrier and remove the gage. Tighten the plug of the pressure measuring port.

RELIEF VALVE

1. The relief valve is a safety device which is used to protect the breaker when the pressure rises in hydraulic circuit.

2. The operating pressure of the breaker determines the setting of the relief valve in the pressure line.

3. The relief valve setting should be acceptable as per the specifications of each HAMMEROC models.

3.4 OPERATING TEMPERATURE

The operating temperature is -20°C ~ 80°C. If the temperature is lower than -20°C, the breaker and tool must be preheated before starting the operation in order to avoid breakage of the accumulator, membrane and the tool. During operation, they will remain warm.

3.5 STORAGE

LONG TERM STORAGE

Observe the following points when the hammer is stored. In this way the major parts of the attachment are protected from rust and the machine is ready to be used whenever necessary.

1. The storage area must be dry.
2. The tool must be removed in hydraulic hammers.
3. The lower end of the piston, tool and tool bushings must be well protected with grease in all hydraulic hammers.
4. Connections must be sealed with clean plugs to prevent oil leakage and dirt from getting into couplings.
5. The product must be stored in the vertical position.
6. Make sure the product can not fall.

LUBRICATION

1. HAMMER TOOL GREASING

1.1 RECOMMENDED GREASES

- ESSO EOL 232
- SHELL Kuggfett
- SHELL Extrema MDS
- WYNNS GS80
- KLUBER Crafloscon C-SG 0 Ultra

1.2 TECHNICAL DATA

- NLGI grade 2.
- Lithium soap
- Dropping point 230 °C
- Viscosity at 40°C (230 cSt)
- Temperature range -30°C ~ 200°C

1.3 MANUAL LUBRICATION

GREASING INTERVAL

1. Tool shank must be well lubricated before installing tool.
2. 5 ~ 10 strokes from grease gun to tool bushing and tool at regular intervals.
3. Proper interval and amount of grease to decrease wearing of tool and good working conditions.
   This should be done every 2 hours.

Insufficient greasing or improper grease may cause :

- Abnormal wear of tool bushing and tool
- Tool breakage

CORRECT GREASING

While greasing, the hammer must be standing upright resting on the tool to ensure that the grease will penetrate downwards between the tool and the tool bushing.
Do not fill the space between the piston and the tool with grease.

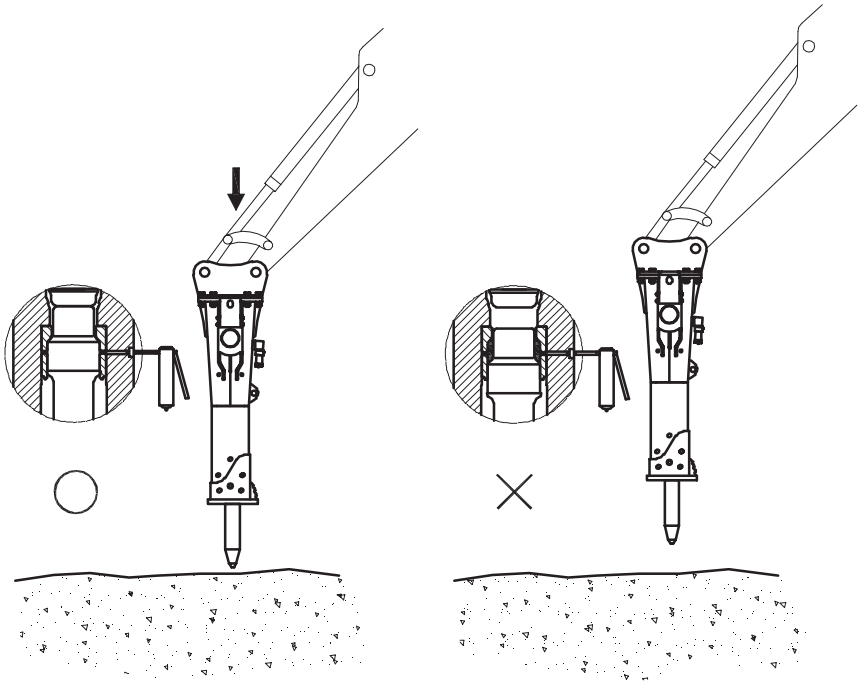

GREASING POINT(S)

The greasing points on the hammer have been marked with the following sticker.

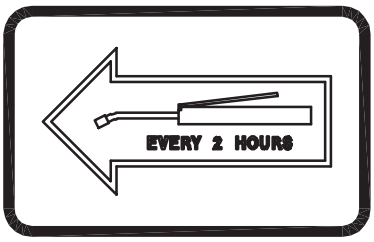

1.4 AUTOMATIC LUBRICATION

Lubrication of the hammer can be made automatically by equipping the carrier with a lubrication pump. The tool grease is supplied from the pump into the hammer by hose.

Advantages of the automatic lubrication system are :

- Longer service life for wear parts
- Higher utilization rate of the hammer

2. HYDRAULIC OIL

2.1 REQUIREMENTS FOR HYDRAULIC OIL

GENERAL REQUIREMENTS

In general, the hydraulic oil originally intended for the carrier can be used with this product. However, since working with the product heats the oil more than the usual excavation work, the temperature of the oil must be monitored. If the temperature of the hydraulic oil exceeds +80°C, an auxiliary oil cooler is needed. When the product is used continuously, the temperature of the hydraulic oil normalizes at a certain level depending on conditions and on the carrier.
The temperature in the tank must not exceed the maximum allowed.

OIL SPECIFICATIONS

Table below shows hydraulic oils recommended for hammer use. The most suitable oil is selected in such a way that the temperature of the hydraulic oil in continuous use is in the ideal area on the chart and the hydraulic system is used to best advantage.

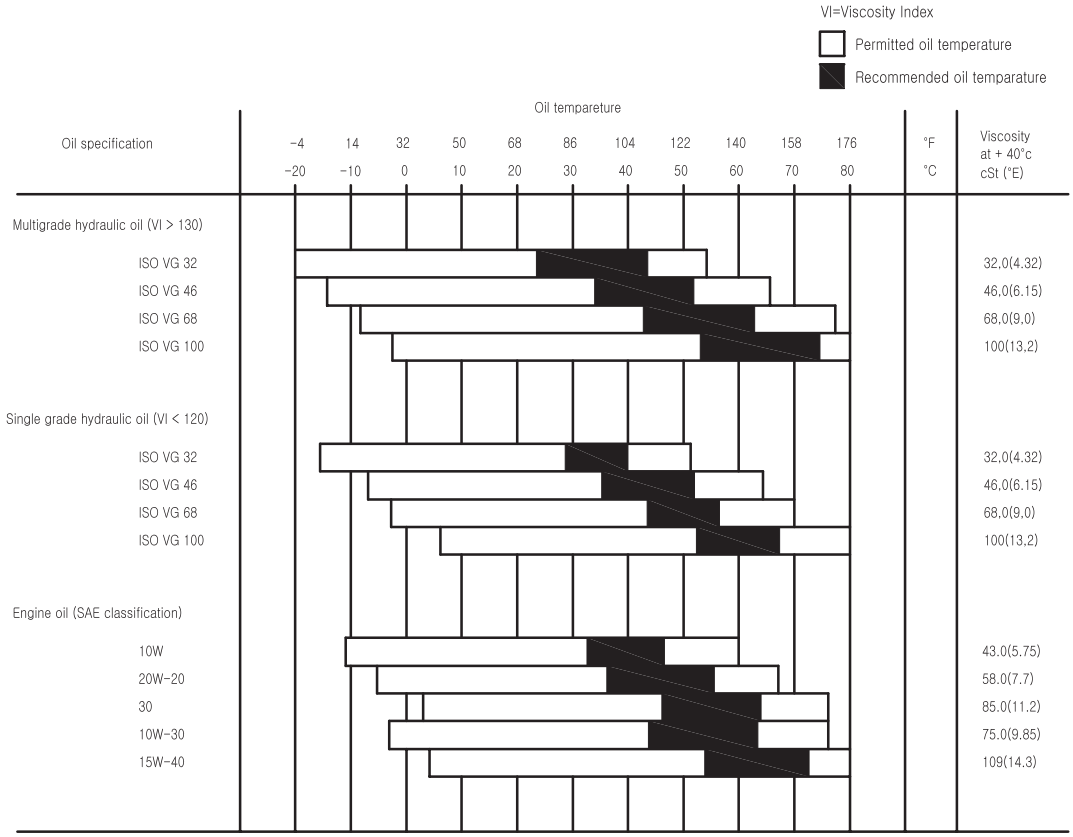

Problems due to incorrect hydraulic oil viscosity in the hammer :

IF OIL IS TOO THICK

- Difficult start up
- Stiff operation
- Hammer strikes slowly
- Danger of cavitation in pumps and in the hydraulic hammer
- Sticky valves
- Filter by-pass opens, impurities in the oil are not removed

IF OIL IS TOO THIN

- Efficiency losses (internal leaks)
- Damage to gaskets and seals, leaks
- Accelerated wearing of parts, because of decreased lubrication efficiency
- Hammer strikes irregularly and slowly
- Danger of cavitation in pumps and in the hydraulic hammer

CLEANNESS OF HYDRAULIC OIL

The hydraulic oil filter of the carrier will clean the oil flowing through the breaker. The purpose of the oil filter is to remove impurities from the hydraulic oil since they cause accelerated component wear, blockages and even seizure. Impurities also cause the oil to overheat and deteriorate.
Air and water are also impurities in oil.

2.2 OIL COOLER

The correct place to connect the hammer return line is between the oil cooler and the main filters. The hammer return line should not be connected before the oil cooler. Routing the hammer flow through the cooler, might damage either the cooler, due to pulsating flow, or the hammer, due to increased back pressure. The carrier hydraulilc system must be able to maintain the temperature within an acceptable level during the hammer operation. Here two reasons are.

1. Seals, wipers, membrane are other parts manufacturered from the corresponding materials can normally stand temperature up to 80°C
2. The higher the temperature is, the less viscous oil gets thus losing its capability to lubricate.

A standard carrier, with a proper hammer circuit, meets the requirements of the necessary cooling capacity. If the oil temperature tends to be too high during the hammer operation, the following things must be checked :

- The hammer circuit pressure relief valve is not open when the hammer is operated.
- The hammer circuit pressure drops
- Accelerated wearing of parts, because of decreased lubrication efficiency

2.3 OIL FILTER

The purpose of the oil filter is to remove impurities from the hydraulic oil. Air and water are also impurities in oil. Not all impurities can be seen with the naked eye.

Impurities enter the hydraulic system :

- During hydraulic oil change and refilling.
- When components are repaired or serviced.
- When the hammer is being installed on the carrier.
- Because of component wear.

The purpose of the oil filter is to remove impurities from the hydraulic oil. Air and water are also impurities in oil. Not all impurities can be seen with the naked eye.

In hydraulic hammer work the carrier oil filter must fulfill the following specifications :

- The oil filter must allow maximum particle size of 25 microns (0.025mm)
- The oil filter material must be man-made fiber cloth or very fine gauge metallic mesh to withstand pressure fluctuations.
- The oil filter must have a nominal flow capacity of at least twice the hammer's max. flow.

In general, oil companies gurantee new oils to have a particle count of 40 microns maximum. Filter the oil when filling the tank.

The damage caused by hydraulic oil impurities in the carrier and hammer circuits :

A. The working life of the pumps and other components is significantly shortened.

- Rapid wear of parts.
- Cavitation.

B. Wear of cylinder and gaskets.

C. Reduced hammer efficiency.

- Accelerated wear of moving parts and seals.
- Danger of piston seizing up.
- Oil leakages.

D. Shortened working life and reduced lubricating capability of oil.

- Oil overheats.
- Oil quality deteriorates.
- Electro-chemical changes in hydraulic oil.

E. Valves do not function properly.

- Spools bind.
- Rapid wear of parts.
- Blocking of small holes.

MAINTENANCE

1. ROUTINE MAINTENANCE

1.1 OVERVIEW

This product is a precision made hydraulic machine. Therefore, great care and cleanliness should be taken when handling any of the hydraulic components. Dirt is the worst enemy in hydraulic systems. Handle the parts carafully and remember to cover any cleaned and dried parts with clean lint-free cloth. Do not use anything other than purpose designed materials for cleaning hydraulic parts. Components, gaskets and seals in the hydraulic system should be oiled with clean hydruallic oil before assembly.

1.2 MAINTENANCE INTERVALS

NOTE : The times given refer to the machine hours while the attachment is installed.

EVERY TWO HOURS

A. Grease the tool shank and the tool bushing.

B. Observe hydraulic oil temperature, all lines and connections as well as impact efficiency and evenness of operation.

C. Tighten loose connections.

EVERY 10 HOURS OR AT LEAST ONCE A WEEK

A. Remove the bushing pin and the tool and check their condition. Grind burrs away if necessary.

B. Check that the tool has received sufficient greasing.

EVERY 50 HOURS OR AT LEAST ONCE A MONTH

A. Check the tool shank and tool bushing for wear.

B. Check the hydraulic hoses. Replace if necessary. Do not let dirt get into the hammer or hoses.

C. Check that the hammer moves normally inside the housing and that buffers are in good condition.

D. Check the condition of wear plates by moving hammer. The maximum allowed clearance is appro--ximately 10 mm.

EVERY 600 HOURS OR ONCE A YEAR

This service is recommended to be done by your local dealer after 600 operating hours. Neglecting the yearly service can cause severe damage to the hammer.

A. Check all hydraulic connections.

B. Check that the hydraulic hoses do not rub against anything in any boom/stick position.

C. Replace and inspect the hydraulic oil filters of the carrier.

1.3 OTHER MAINTENANCE PROCEDURES

WASHING THE ATTACHMENT

When working with attachment and removing it from the carrier, dirt (mud, rock, powder etc.)can become attached to it. Wash the outside of the product with a steam washer before sending it to the workshop. Dirt can cause difficulties is disassembly and assembly otherwise.

CAUTION! Plug the pressure and return line before washing the product or else dirt can enter into it and this may cause damage to the components.

2. REMOVAL OF TOOL

WEAR LIMITS AND LUBRICANTS FOR TOOL REMOVAL

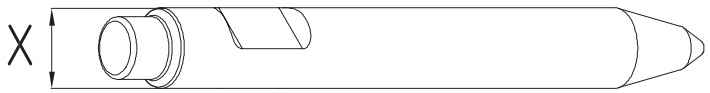

ITEM	WEAR LIMIT
TOOL DIAMETER (WORN OUT)	6.5 in (165 mm)

ITEM	LUBRICANT
TOOL AND TOOL PINS	TOOL GREASE

REMOVAL OF TOOL

A. Set the hammer on level ground.

B. Make sure that the carrier's transmission is in neutral and the parking brake is engaged.

C. Stop the engine.

D. Remove the Rubber plug A

E. Remove the Snap ring B

F. Remove the Rubber plug C

G. Remove the Bushing pin D

H. Remove the Tool pin E

I. Remove the Bushing pin D

J. Remove the Tool. Use lifting device if necessary.

INSTALLATION OF TOOL

A. Clean all parts carefully.

B. Measure the tool diameter (marked X) from the area marked on the diagram.
Replace tool if necessary.

C. Check Tool bushing for wear.

D. Clean and coat Tool and Bushing pins with grease.

E. Install Tool and align the grooves of the Tool with the pin bores.

F. Install the Bushing pin D

G. Install the Tool pin E

H. Install the Rubber plug C

I. Install the Snap ring B

J. Install the Rubber plug A

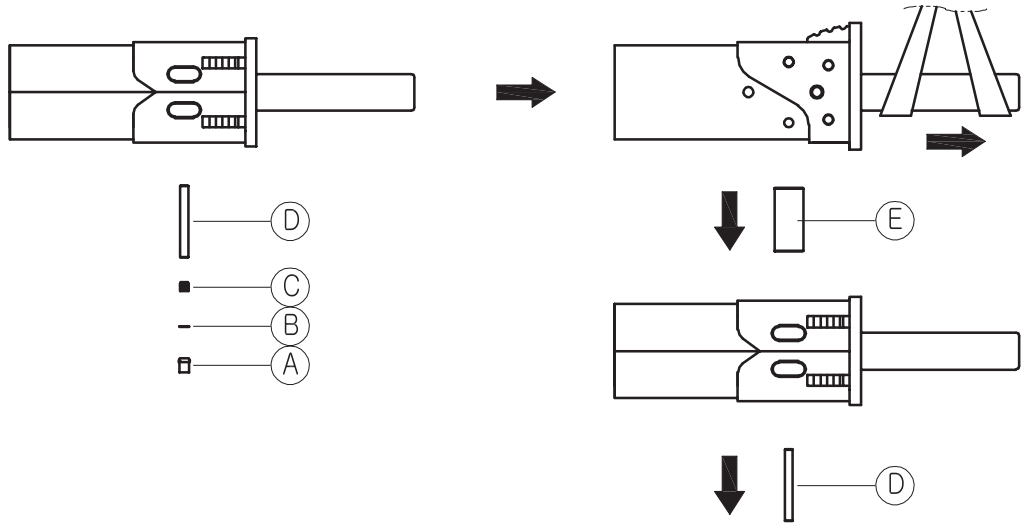

WEAR LIMIT OF TOOL

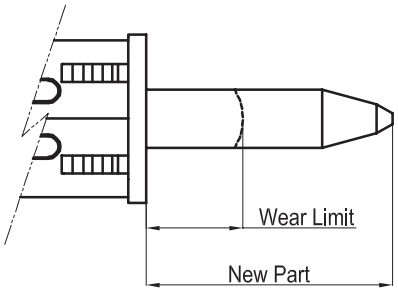

UNIT(inch)

MODEL	NEW	REJECT
HR35AT	27.91	19.69

3. CHANGING TOOL BUSHING

REMOVAL OF TOOL BUSHING

A. Remove the Tool.

B. Remove Rubber plug A , Snap ring B, Rubber plug C, Bushing pin D

C. Remove the Tool bushing E

INSTALL OF TOOL BUSHING

A. Clean all parts carefully.

B. Install O-ring F

C. Lubricate the contact surfaces of Tool bushing E and front head.

D. Install Tool bushing E

E. Install Rubber plug A , Snap ring B, Rubber plug C, Bushing pin D

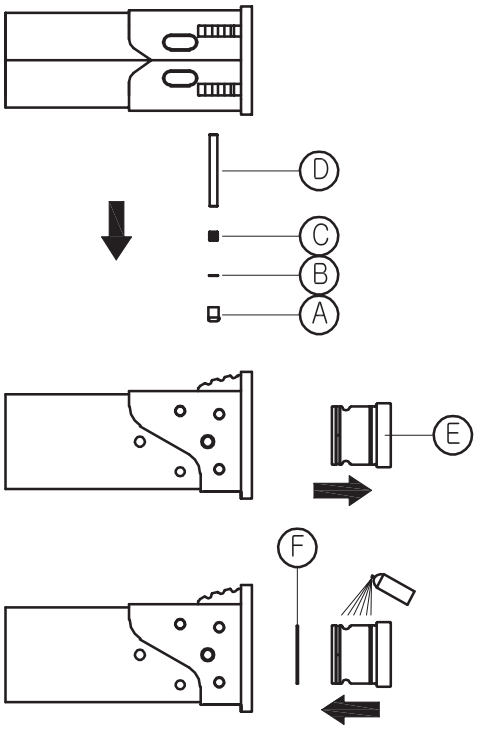

WEAR LIMITS FOR TOOLS AND TOOL BUSHING

Check the tool bushing and tool shank for wear every 50 hours of hammer use or monthly.

TOOLS

Original diameter (D1) for tool shank is 6.5in (165 mm).

Replace the tool if the diameter (D2) of the tool shank is less than 6.3in (160mm).

TOOL BUSHING

Original diameter (D2) for tool bushing is 6.5in (165 mm).

Replace the tool bushing if the diameter (D4) of the tool bushing is more than 6.7in (170mm).

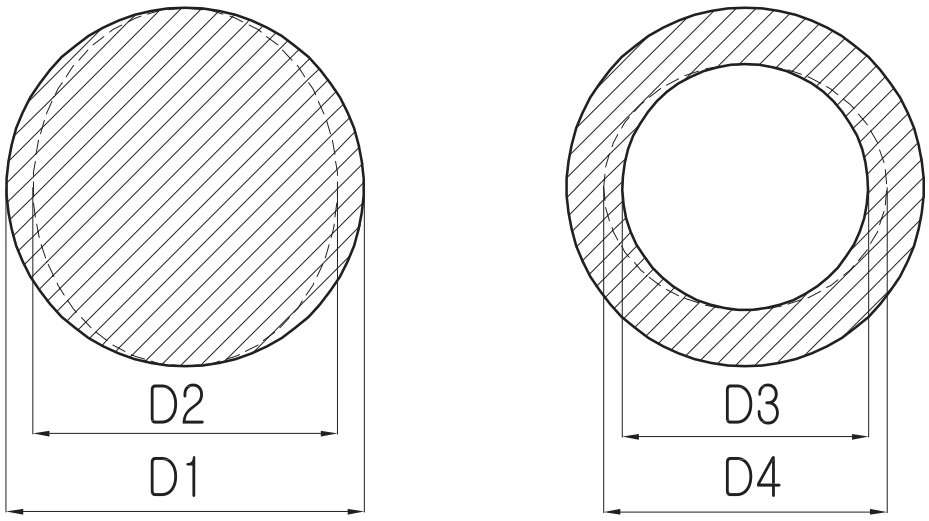

4. Removal and installation of hammer assembly

REMOVAL

A. Remove the tool and set the breaker to the vertical position on the floor and support.

B. Disconnect the hoses and plug them as well as the breaker inlet and outlet.

C. Open the top cover bolts.

D. Remove the top bracket A.

E. Remove the top buffer wearing plate B and the top buffer plate C.

F. Remove the top buffer D.

G. Lift the hammer ass'y so that there is 10mm in clearnace between the valve housing and the side buffer.

H. Shake the hammer ass'y, if the hammer ass'y moves more than 10mm at the level of the check, replace the wearing plates.

I. Lift the hammer ass'y out of the housing and if necessary, change the wearing plates.

ASSEMBLING

A. After changing the wearing plates, set the hammer ass'y into the housing and check the clearance by shaking the hammer ass'y.

B. After placing the hammer ass'y into the housing, the buffer system, hoses and mounting bracket refitted. Install the tool.

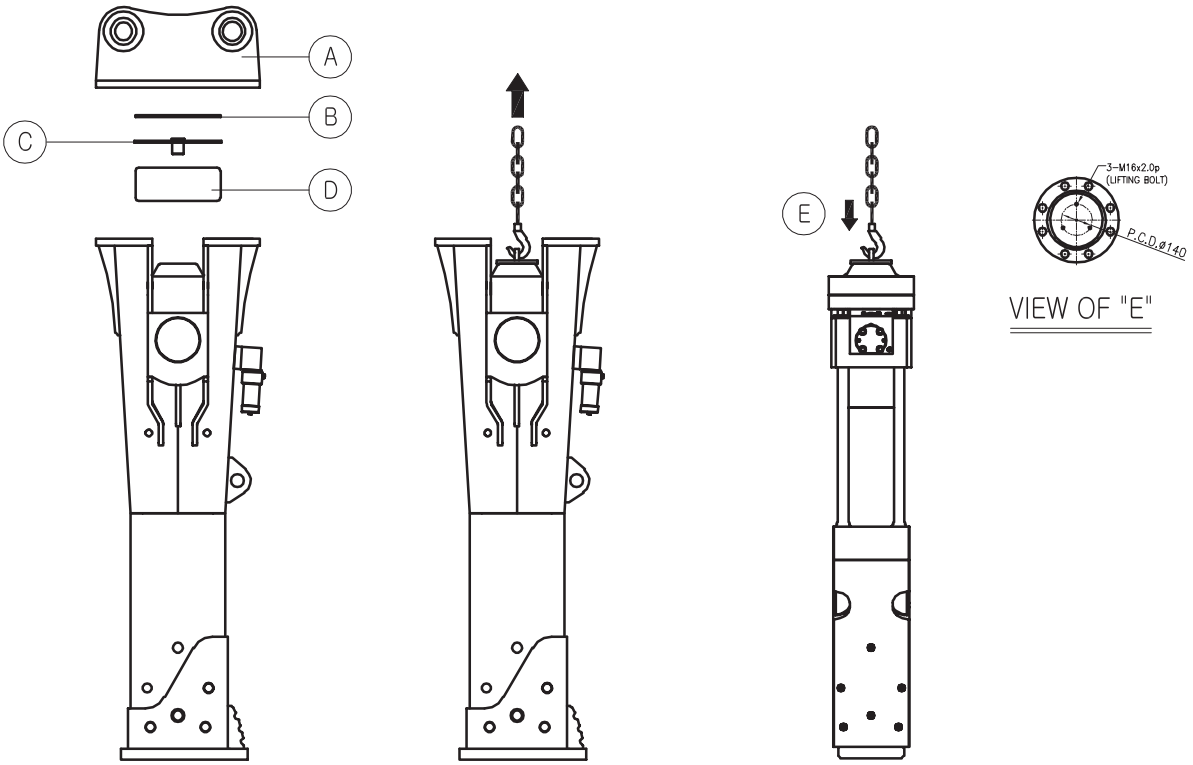

5. ACCUMULATOR

RELEASING THE PRESSURE FROM THE ACCUMULATOR

A. Remove the hammer from housing.

B. Set the hammer into the assembly stand by removing the plate the pressure accumulator and lifting the hammer with a lifting ring A.

C. Remove the lifting ring A and the accumulator cap B.

D. Carefully open the accumulator gas bolt C to allow the nitrogen gas to flow out.

E. Remove the accumulator gas bolt C and usit ring D when all the pressure is released from the accumulator.

WARNING! Do not open the accumulator before releasing the 40 bar nitrogen pressure via the gas bolt.

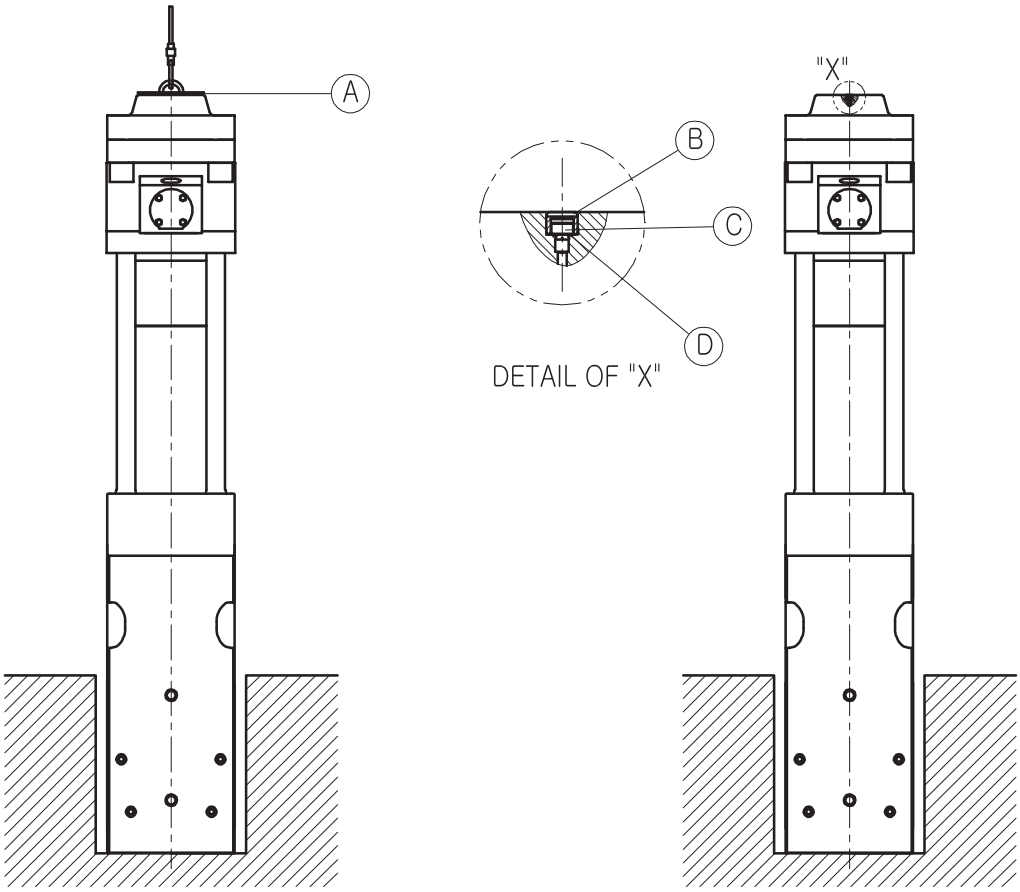

REMOVAL

A. Open the accumulator cover bolt E.

B. Lift the accumulator and remove the seal F.

C. Set the accumulator on the assembly stand and the accumulator bottom bolt G.

D. Remove the accumulator cover H and membrane I and guide pin J.

ASSEMBLING

A. Clean and dry parts carefully.

B. Set the accumulator bottom K on the assembly stand and install the guide pin J.

C. Fit a new membrane I in place. Apply silicon grease on the gas side of the membrane as well as on the accumulator cover H.

D. Install accumulator cover H.

E. Apply the thread grease to the thread area and the accumulator bottom bolt G.

F. Install the bottom bolt G. Tighten the bottom bolt G with a torque wrench to the torque 500 Nm.

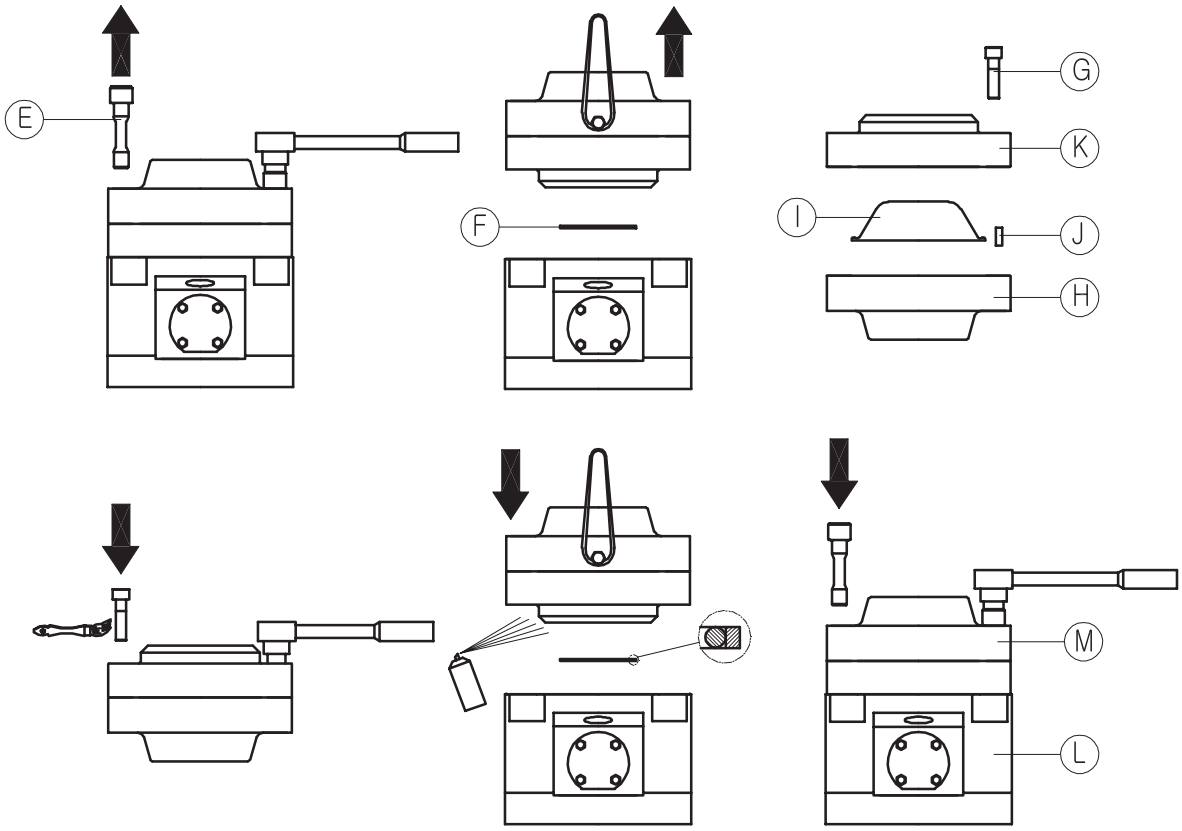

FITTING THE ACCUMULATOR

A. Install the seal F into the groove in the bottom of the accumulator. Use grease to prevent the seal from failing out during mounting.

B. Apply MoS2 spray on the contact surfaces of accumulator M , housing L.

C. Lift the accumulator into place on the valve housing.

D. Apply thread grease to th thread area and the accumulator cover bolt E.

E. Tighten the bolts with a torque wrench first to the torque of 300 Nm and finally to the torque of 900Nm.

6. CHARGING ACCUMULATOR

WARNING! Use only nitrogen gas.

A. Furnish the accumulator with a new usit ring C and gas bolt D.

B. Connect the charging device G to the low pressure accumulator.

C. Open the screw F through the charging device.(3 turns)

D. Open the discharge valve of the charging device. Open carefully the nitrogen gas bottle valve and check that the nitrogen gas flows properly. Shut the nitrogen gas bottle valve. Shut the discharge valve of the charging device.

E. Open carefully nitrogen gas bottle valve and observe the gage pressure.

F. Shut the nitrogen gas bottle valve when the pressue is 45 bar. Wait 10 minutes. Adjust the pre--ssure to 40 bar in the accumulator by carefully opening and closing the discharge valve of the charging device. Shut the gas bolt D, torque 20 Nm.

G. Let the pressure out of the hose by opening the discharge valve of the charging device. Remove the charging device.

H. Check the gas-tightness by dropping some oil on the gas bolt D.

I. Insert accumulator cap E.

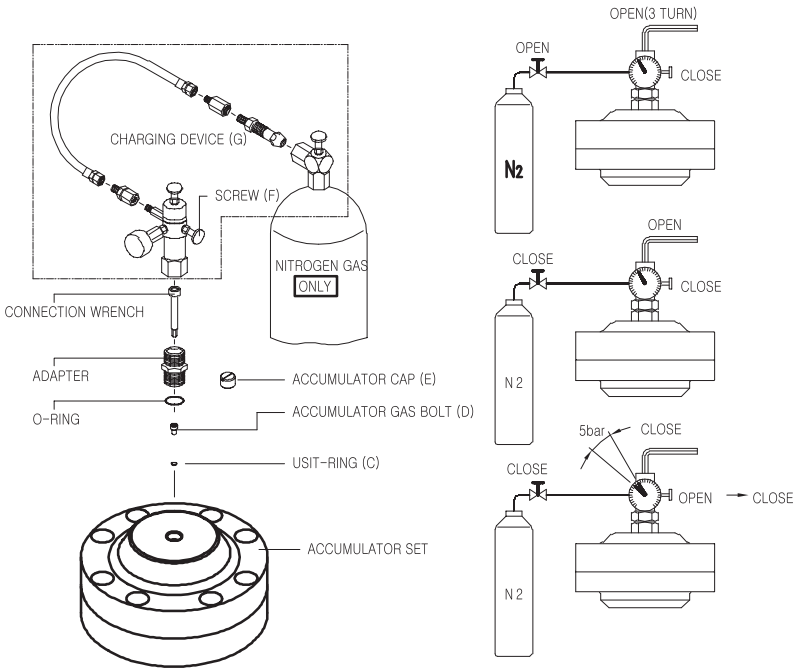

7. REMOVAL AND INSTALLATION OF MAIN SPOOL

REMOVAL

A. Loosen the sleeve cover bolt A, cover B and C. Use M20 bolts to pull the covers out.

B. Push the main spool D. Carefully remove the small spools E and F in the ends of the spool D.

C. Fasten the puller in the holes of bolts A of valve housing. Put the flange against the sleeve I and drive the sleeve carefully out.

INSTALLATION

A. Check the parts carefully. If necessary use fine emery cloth or grinding agent to remove any scratch or burrs. Clean and oil grease parts.

B. Install new O-rings G on the covers B and C. Install new O-rings H (6pcs) in the sleeve I.

C. Fasten the extractor on the valve housing side marked with X. Install the sleeve so that X on its end comes to the same side with valve housing X.

D. Install the spool D so that X on its end will be again on the X side of the valve housing. Do not forget the spools E and F. Check that the spools move freely and apply some oil.

E. Install covers B (cover marked with X comes to the same side with valve housing X)

F. Grease tab area and cover bolts A. Install locking washers J and cover bolts A.

G.Tighten the bolts with a torque wrench. Refer to the torque specifications.

H. When assembling and disassembling the main spool, sleeve the extractor K must be used.

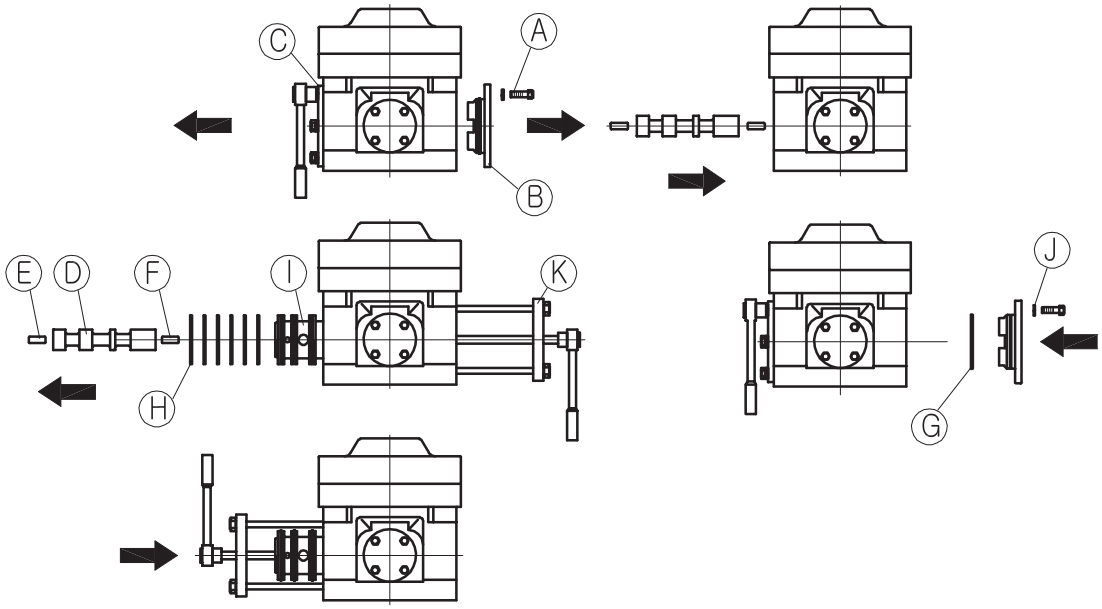

8. REMOVAL AND INSTALLATION OF OPER.VALVE

REMOVAL

A. Open the bolts A (4pcs). The operating valve is located in the valve housing, on the return side. Screw four of the A bolts into the threaded holes in the covers and use them to pull the covers B out.

B. Use the special pusher device to push the valve out.

C. Fix the valve cover B in the valve housing or on a bench vise and loosen the guide D.

D. Remove the spool E, the spring guide G, and the spring F, the pressure adjusting shim(s) H.

E. Remove the seals I,J,K and the O-ring C.

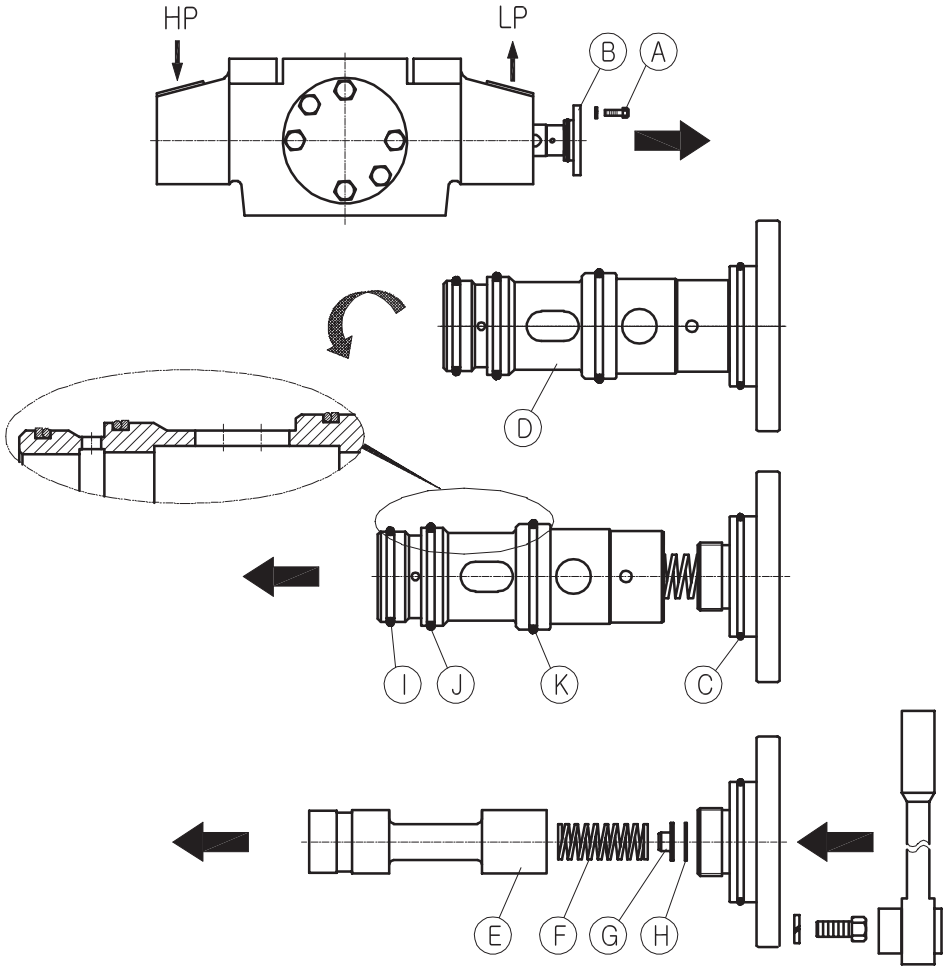

ADJUSTMENT

A. When the pre-loading of the spring changes, the operating pressure changes as well.

B. The operating pressure of the hammer is adjusted by adding or removing the pressure adjusting shims H between the cover B and spring guide G.

INSTALLATION

A. Check parts carefully. If necessary, use fine emery cloth or grinding agent to remove any scratch or burrs. Clean and oil/grease parts.

B. Set new O-ring C on the oper. valve cover B.

C. Fix the oper.valve cover B on a bench vise and insert the operating valve shim(s)H, spring guide G and spring F.

D. Install the operating valve spool E.

E. Fasten the operating valve guide D to thr cover B.

F. Install the seals I,J,K.

G. Push the operating valve into the valve housing with special pusher device.
Grease the tab area, bolts and screws.

H. Install locking washers L and bolts A.

I. Tighten the bolts A with a torque wrench. Refer to the torque specifications.

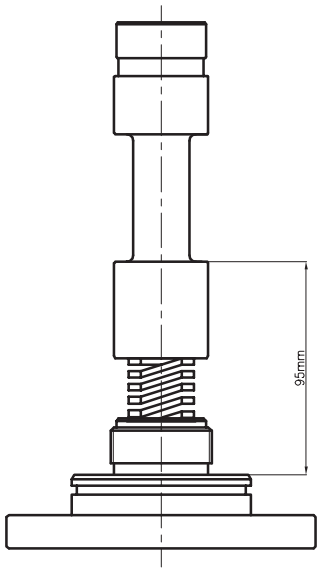

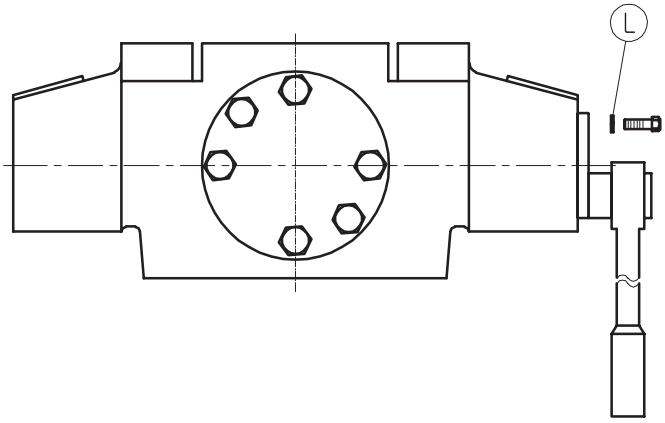

9. REMOVAL AND INSTALLATION OF FLOW VALVE

REMOVAL

A. Loosen the bolts A and pry the valve out using screwdriver. The flow valve is located in the valve housing pressure side.

B. Push the spring guide B in with a screwdriver.

C. Pry out the lock ring C with a screwdriver.

D. Remove spring guide B,sprng D, spool E, O-ring F and G.

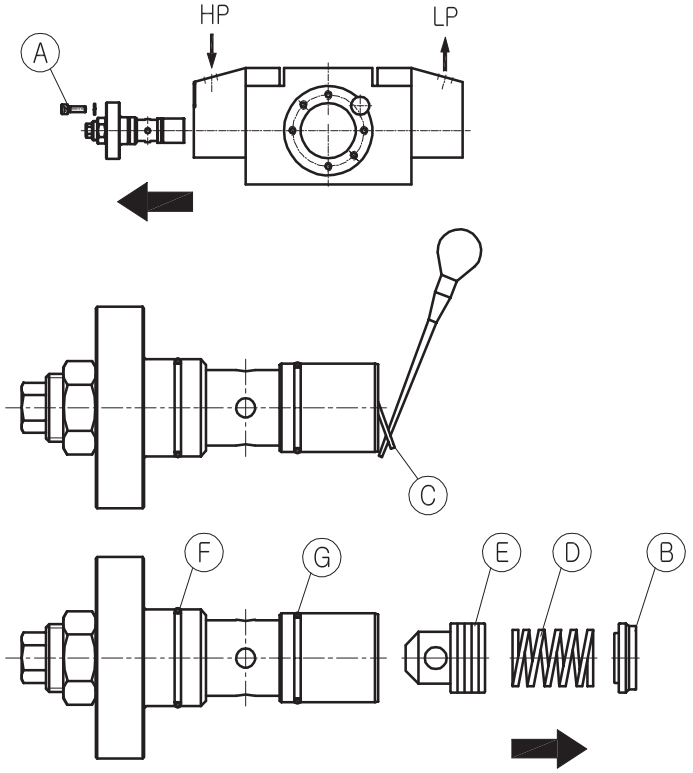

INSTALLATION

A. If necessary, use fine clean cloth or grinding agent to remove any scratch or burrs.

B. Install new O-ring M, backup ring L, and G. Install the spool K, nut I, and the plug J.

C. Install new O-ring F and G, Install the spool E spring D and the spring guide B.

D. Install the lock ring C. Check that the spool moves properly.

E. Install the flow valve into the valve housing, fit the bolts A and the locking washer L.

F. Tighten the bolts A with a torque wrench. Refer to the torque specifications.

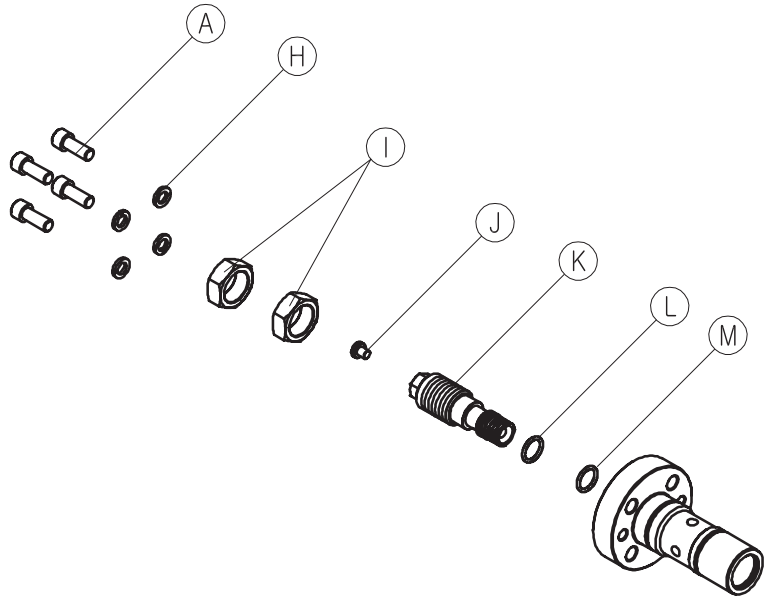

10.LOOSENING AND TIGHTENING SIDE RODS

LOOSENING

A. Remove the accumulator. Remove rubber rings A and lock washers B (4 pcs).

B. Mark each side rod C and its nut D as pairs.

C. Heat the side rods with propane flame to loosen the side rods.(max. temperature 200°C).

D. Remove the nuts D. Do not turn the nuts D upside down.

TIGHTENING

A. Use the crack detecting equipment to check if there are any cracks in the side rods.

B. Clean the side rods and grease the screw threads and the contact surface of the rods and the valve housing. Install the side rods C. Check that each side rod has the correct nut as its pair. Do not turn the nuts upside down.

C. Using a torque wrench tighten the side rods is three steps. Refer to the torque specifications.

D. Heat the side rods with propane flame (max. temperature 200°C) and tighten side rods.

E. Install the lock washer B so that the side rods can not become loose. Install the rubber rings A.

F. Fill the groove between the side rods and the front head with silicon compound.

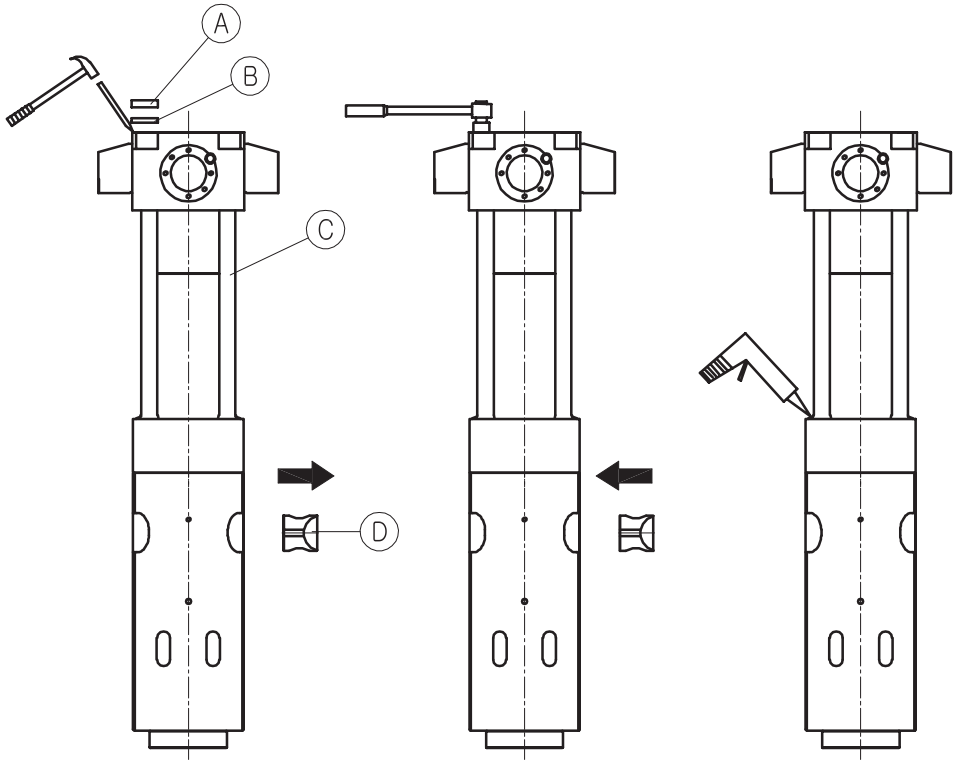

STEP	TORQUE
1 ST	300 N.m
2 ND	500 N.m
3 RD	700 N.m
4 TH	+120°

11. DISASSEMBLING AND ASSEMBLING CYLINDER

LOOSENING

A. Remove the accumulator and side rods and valve housing.

B. Screw M24 lifting eyes into the seal housing A and lift out the seal housing.

C. Screw M16 lifting eye into the piston I and lift it carefully out. Install M24 lifting eyes in the holes of the cylinder and carefully remove the cylinder from the front head.

D. Remove the seals B,C,E and wiper F, O-ring M.

E. Remove from the cylinder, the guide pins G, the seal H, the wiper J and the O-ring K.

ASSEMBLING

A. Check the condition of the cylinder L, the seal housing A, and the front head. If necessary, use fine emery cloth or grinding agent to remove any scratches or burrs. Clean and oil parts carefully.

B. Install the seal H and the wiper J into the cylinder. Install the M24 lifting eyes into the holes of the cylinder and insert into the front head. Fit the guide pin G in place.

C. Install the piston into the cylinder.

D. Install the seal B,C,D,E and wiper F and O-ring M of the seal housing A into the cylinder.

E. Lift the seal housing into place so that guide pin on the cylinder fits in the corresponding hole of the seal housing. Fit the seal housing carefully in its place.

F. Check that opposite surface are clean. Put the guide pin G into place in the seal housing. Lift the valve housing onto the seal housing using a lifting cable. Install the side rods and the accumulator.

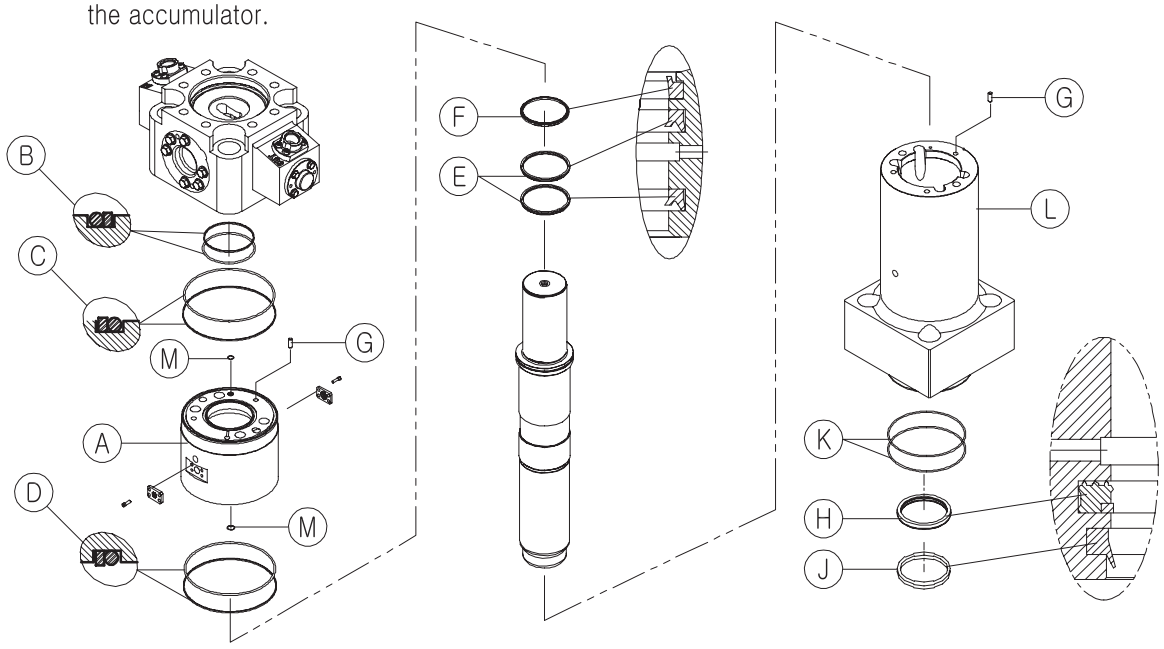

12. CONNECTIONS

ITEM	REMARKS	SPECIFICATION
A	IN-port	PF 1
B	OUT-port	PF 1 1/4"
C	Grease	PF 3/8"
D	Air line	PF 3/8"

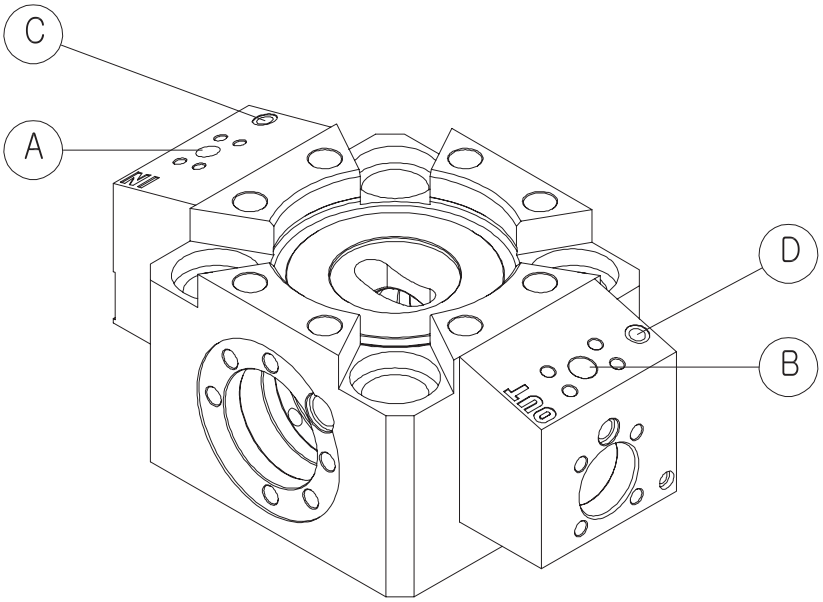

13. TORQUES

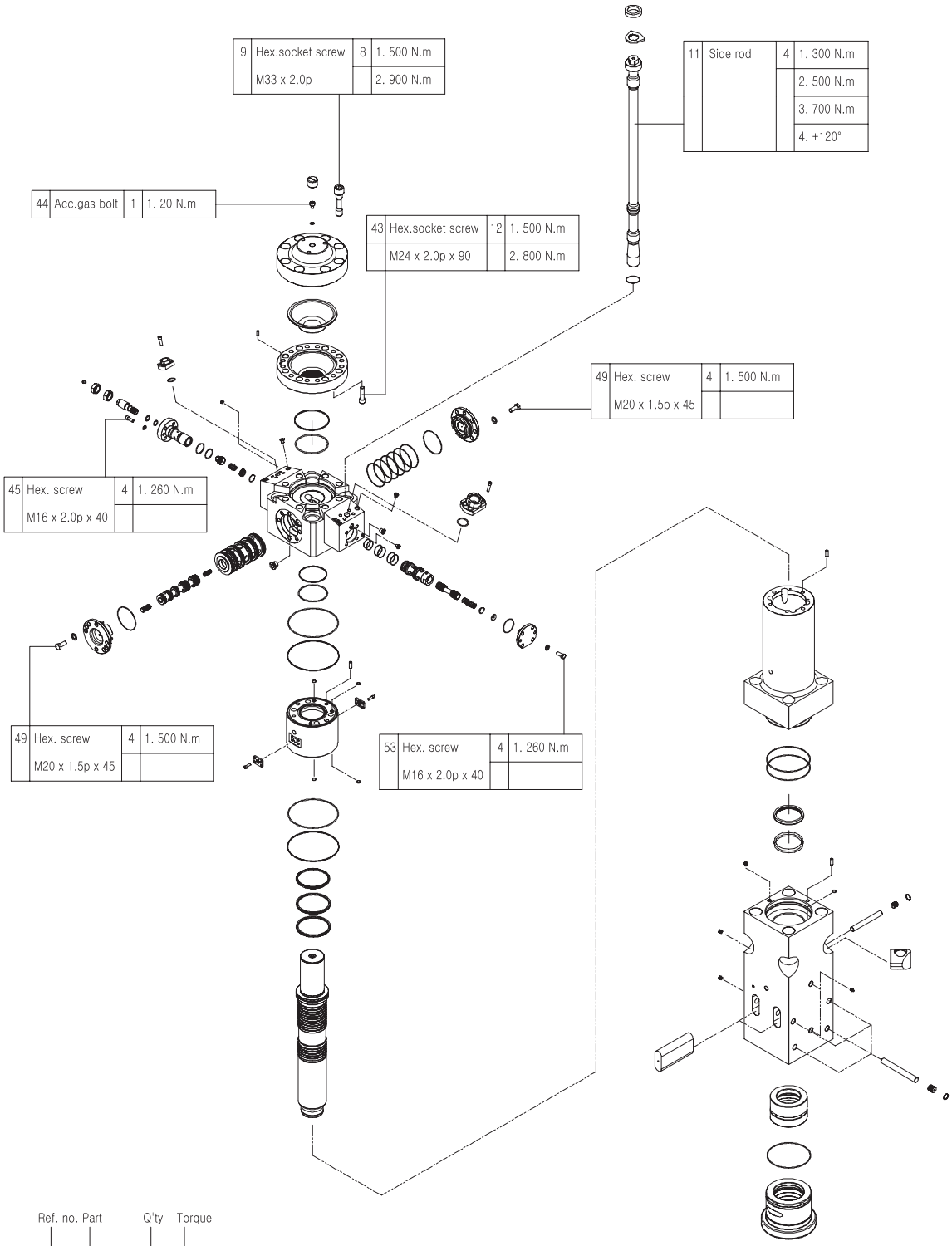

Ref. no.	Part	Q'ty	Torque
38	Acc. gas bolt	1	1. 20 N.m

Accumulator charging pressure (+20°C) : 40 bar

14. SERVICE TOOL LIST

Parts name	Specs	Q'ty	Remarks
N2 GAS CHARGING DEVICE	N_2 GAS	1	ACCUMULATOR
ADAPTER	–	1	
CONNECTION WRENCH	–	1	
O-RING	1BP18	1	
TORQUE WRENCH	100~800 Nm	1	
	300~1000 Nm	1	
PRESSURE GAUGE	100 BAR	1	
	250 BAR	1	
LIFTING CHAIN BLOCK	6 ton	1	
SLEEVE PULLER	–	1	
WORKING TABLE	–	1	
GREASE GUN	–	1	
L-WRENCH	6mm	1	
	10mm	1	
	12mm	1	
	14mm	1	
	17mm	1	
	19mm	1	
	24mm	1	
SPANNER	19mm	1	
	24mm	1	
	30mm	1	
	38mm	1	
	41mm	1	
	55mm	1	
LIFTING EYE BOLT	M16x2.0p	3	
	M24x3.0p	2	
HEX. SOCKET	19mm	1	
	24mm	1	
	30mm	1	
	41mm	1	
	55mm	1	
	60mm	1	

15. GREASE PUMP

1) Dimension

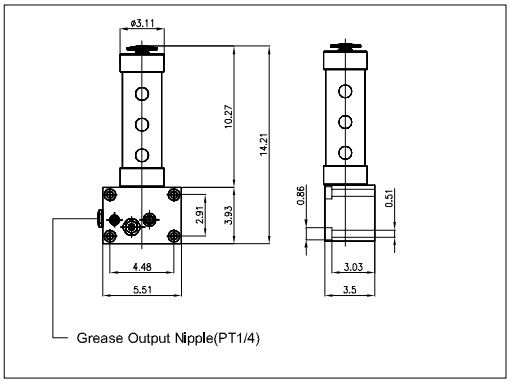

2) Adjustment of the quantity of Grease

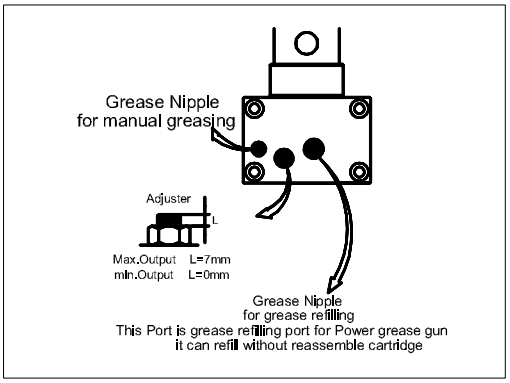

3) Grease filling procedure

a. Insert an injection port into the Grease

b. Pull the handle and wait for 2seconds
(Grease gets into the inside of pump)

c. Inset the handle
(Grease becomes compressed in the refilling cartriedge)

< Repeat 2,3 >

e. When grease is sufficiently filled fasten the handle by turning it clockwise

TROUBLE SHOOTING

1. HAMMER DOES NOT START

A. PISTON IS IN ITS LOWER HYDRAULIC BRAKE

Keep the hammer control valve open and force the tool against to the object.
The tool head will push the piston out of its area.

B. HAMMER CONTROL VALVE DOES NOT OPEN

When operating the hammer control valve, check that the pressure line pulsation this indicates the hammer control valve is opened. If the valve does not operate, check the operationg means : mechanical connections, pilot pressure or electrical control.

C. RELIEF VALVE IN HUDRAULIC CIRCUIT IS OPENED AT A LOW PRESSURE

Check installation. Check the relief valve operation. Adjust the relief valve in hydraulic circuit.
Measure the high pressure in the hammer inlet line.

D. LEAKAGE FROM RETURN LINE IN CARRIER HYDRAULIC CIRCUIT

Check installation. Check the pump and the other hydraulic components.

E. PRESSURE AND RETURN HOSES INSTALLED BACKWARDS

Change the pressure and return hoses.

F. FAILURE IN HAMMER VALVE OPERATION

The hammer must be serviced in an authorized HAMMEROC service shop.

G. PISTON FAILURE

The hammer must be serviced in an authorized HAMMEROC service shop.

2. THE HAMMER OPERATES IRREGULARLY BUT THE BLOW HAS FULL POWER

A. RELIEF VALVE IN HYDRAULIC CIRCUIT OPENS AT A LOW PRESSURE. HAMMER OPERATING PRESSURE IS NOT REACHED

Check installtion. Check the relief valve operation. Adjust the relief valve in hydraulic circuit. Measure the high pressure in the hammer inlet line.

B. FAILURE IN HAMMER VALVE OPERATION

The hammer must be serviced in an authorized HAMMEROC service shop.

C. NOT ENOUGH FEED FORCE FROM THE CARRIER

Refer to correct working methods.

3. HAMMER OPERATES POORLY AND BLOW HAS NO POWER

A. RELIEF VALVE IN HYDRAULIC CIRCUIT OPENS AT A LOW PRESSURE. HAMMER OPERATING PRESSURE IS NOT OPENED

Check installtion. Check the relief valve operation. Adjust the relief valve in hydraulic circuit. Measure the high pressure in the hammer inlet line.

B. PRESSURE LOSS IN THE ACCUMULATOR

The hammer must be serviced in an authorized HAMMEROC service shop.

C. THE WORKING METHOD IS NOT CORRECT

Refer to correct working methods.

D. PRESSURE CONTROL VALVE SETTING IS INCORRECT

The hammer must be serviced in an authorized HAMMEROC service shop.

4. IMPACT RATE SLOWS DOWN

A. OIL OVERHEATED (OVER 80°C)

Check for a fault in the oil cooling system or an internal leakage in the hammer. Check the hydraulic circuit of the carrier. Check the relief valve operation in the carrier. Check the line size.
Assemble an extra oil cooler.

B. RELIEF VALVE IN HYDRAULIC CIRCUIT OPENS AT A LOW PRESSURE. HAMMER OPERATING PRESSURE IS NOT REACHED

Check the installation. Check the relief valve operation. Adjust the relief valve in hydraulic circuit.
Measure the high pressure in the hammer inlet line.

C. LEAKAGE FROM RETURN LINE IN CARRIER HYDRAULIC CIRCUIT

Check the installation. Check the pump and other hydraulic components.

D. PRESSURE LOSS IN THE ACCUMULATOR

The hammer must be serviced in an authorized HAMMEROC service shop.

E. FAILURE IN HAMMER VALVE OPERATION

The hammer must be serviced in an authorized HAMMEROC service shop.

F. HYDRAULIC VISCOSITY IS TOO LOW

Check hydraulic oil.

5. OIL OVERHEATS

A. RELIEF VALVE IN HYDRAULIC CIRCUIT OPENS AT A LOW PRESSURE HAMMER OPERATING PRESSURE IS NOT REACHED

Check the installation. Check the relief valve operation. Adjust the relief valve in hydraulic circuit. Measure the high pressure in the hammer Inlet line.

B. LEAKAGE FROM RETURN LINE IN CARRIER HYDRAULIC CIRCUIT

Check the installation. Check the pump and the other hydraulic components.

C. INTERNAL OIL LEAK IN THE HAMMER

The hammer must be serviced in an authorized HAMMEROC service shop.

D. HYDRAULIC VISCOSITY IS TOO LOW

Check hydraulic oil.

E. COOLING CAPACITY OF THE FACTORY OIL COOLER IS TOOL LOW

Assemble an extra oil cooler.

SPECIFICATION

1. HAMMER SPECIFICATION

1.1 MAIN DIMENSIONS

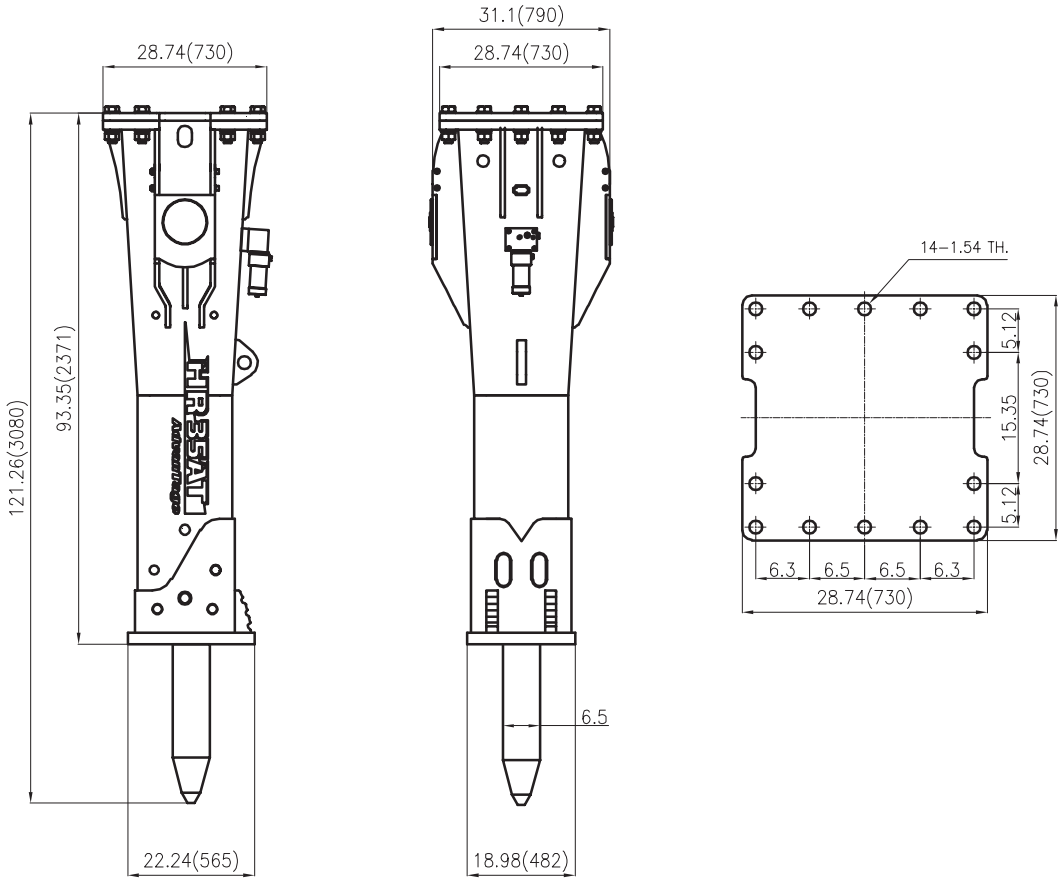

1.2 TECHNICAL SPECIFICATIONS

ITEM	SPECIFICATIONS
Working weight	6500 lb (2950 kg)
Impact rate	300 ~ 450 BPM
Operating pressure	1885 ~ 2176 psi (130 ~ 150 bar)
Relief pressure	2600 ~ 2900 psi (180 ~ 200 bar)
Oil flow	48 ~ 77 g/m (190 ~ 250 l/min)
Back pressure	145 psi (10 bar)
Tool diameter	6.5 inch (165 mm)
Oil temperature	-4 ~ +176 °F (-20 ~ +80 °C)
Hydraulic oil viscosity	1000 ~ 15 cSt
Pressure line size (IN)	25 mm (1in)
Return line size (OUT)	32 mm (1 1/4 in)
Grease Connection	PF 3/8"
Air Connection	PF 3/8"
Accumulator pressure	40 bar (580 psi)
Carrier weight	73000 ~ 99000 lb

A. Includes average top bracket and standard tool

B. Actual impact frequency depends on oil flow, oil viscosity, temperature, and material to be broken

C. Actual perssure depends on oil flow, oil viscosity, temperature, material to be broken and back pressure

D. Check carrier's lifting capacity from carrier manufacturer

2. TOOL SPECIFICATION

2.1 TOOL SPECIFICATIONS HR35AT

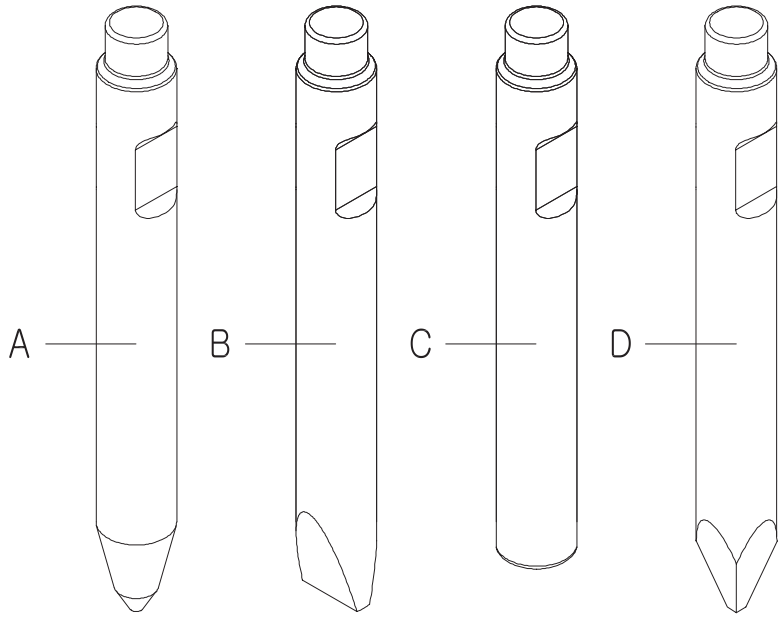

	Name	Length in (mm)	Weight lb (kg)	Diameter in (mm)	Remarks
A	CONE TYPE	53.15 (1350)	432 (196)	6.5 (165)	
B	CHISEL TYPE	53.15 (1350)	445 (202)	6.5 (165)	
C	BLUNT TYPE	51.2 (1300)	449 (204)	6.5 (165)	
D	MOIL TYPE	53.15 (1350)	430 (195)	6.5 (165)	

PARTS LIST

1. HR35AT HOUSING

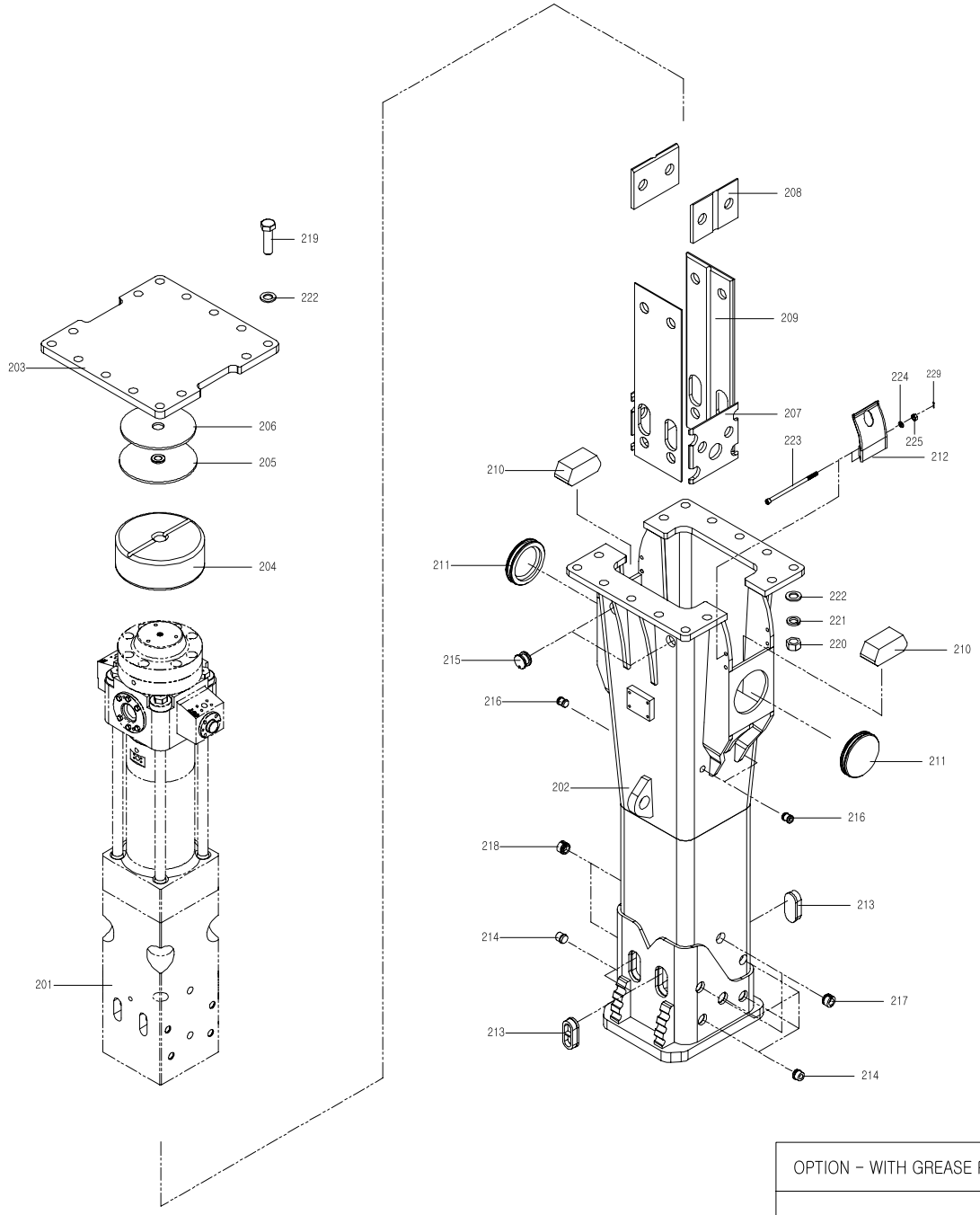

OPTION - WITH GREASE PUMP

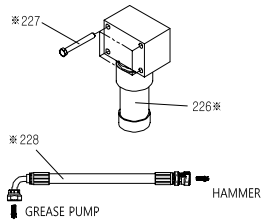

HR35AT HOUSING PART LIST

NO	PART NO.	PART NAME	Q'TY	REMARK
201	-	HAMMER ASS'Y	1	
202	B3200011	HOUSING WELD ASS'Y	1	
203	B3000020	TOP PLATE	1	
204	B3200030	TOP BUFFER	1	
205	B4000070	TOP BUFFER PLATE ASS'Y	1	
206	B4000060	TOP WEARING PLATE	1	
207	B3200020	WEARING PLATE	2	
208	B300A030	WEARING PLATE	2	
209	B3200060	WEARING PLATE	2	
210	B4000090	SIDE BUFFER	2	
211	B4000100	RUBBER (LOGO)	2	
212	B5000150	PORT COVER (IN,OUT)	2	
213	B3000110	RUBBER (PLUG)	4	
214	B4000120	RUBBER (PLUG)	8	
215	B400W270	RUBBER (PLUG)	2	
216	B3000140	RUBBER (PLUG)	4	
217	B3200040	RUBBER (GREASE)	2	
218	B3200050	RUBBER (PLUG)	2	
219	HB3640140	BOLT	14	
220	NN364000	NUT	14	
221	SW360000	SPRING WASHER	14	
222	PW360000	PLANE WASHER	28	
223	SB1420293	BOLT(PORT COVER)	4	
224	SW140000	SPRING WASHER	4	
225	HN142000	NUT	4	
226	HL11CD-400	GREASE PUMP	1	
227	SB12175110	SOCKET BOLT	4	
228	BHSS-G200	HOSE	1	
229	SP320000	SPLIT PIN	4	

2. HR35AT HAMMER

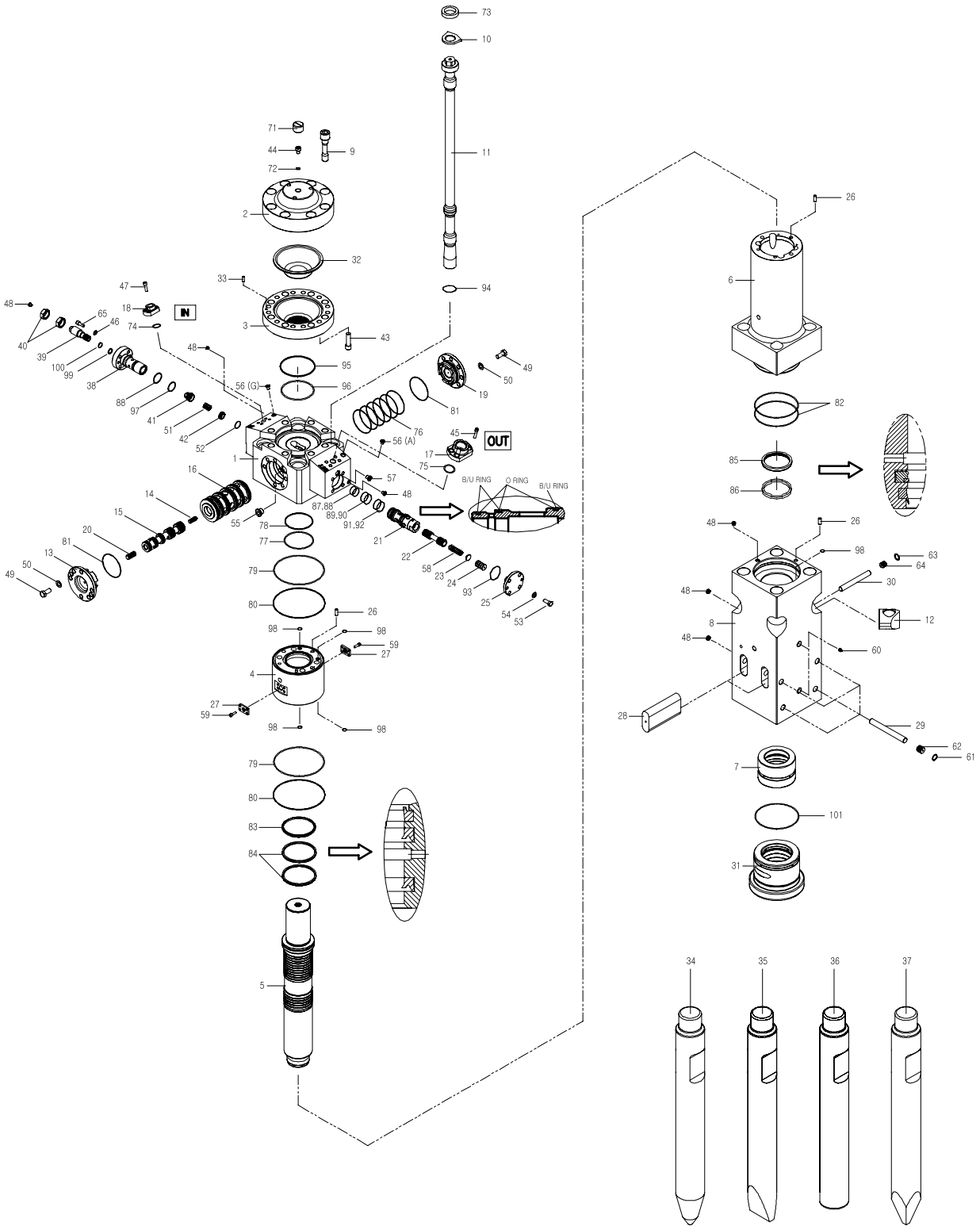

MS35AT HAMMER PART LIST

NO	PART NO.	PART NAME	Q'TY	REMARK
1	B3206900	V/V HOUSING	1	
2	B3206020	ACCUMULATOR COVER	1	
3	B3006030	ACCUMULATOR BOTTOM	1	
4	B3206040	SEAL HOUSING	1	
5	B3206050	PISTON	1	
6	B3206950	CYLINDER	1	
7	B3206080	UPPER BUSHING	1	
8	B3206090	FRONT HEAD	1	
9	B4006100	ACC. COVER BOLT	8	
10	B4006110	LOCK WASHER	4	
11	B3206130	SIDE ROD	4	
12	B3206140	SIDE ROD NUT	4	
13	B4006150	SLEEVE COVER 1.	1	
14	B4006160	SPOOL 2.	1	
15	B3006170	MAIN SPOOL	1	
16	B3006750	SLEEVE	1	
17	B4006190	FLANGE (1 -1/4")	1	
18	B4006200	FLANGE (1 ")	1	
19	B4006240	SLEEVE COVER 2.	1	
20	B4006250	SPOOL 1.	1	
21	B3006770	OPER. VALVE GUIDE	1	
22	B3006780	OPER. VALVE SPOOL	1	
23	B2506280	OPER. V/V SPRING GUIDE	1	
24	B2506290	OPER. V/V SHIM PLATE	5	
25	B3006790	OPER. VALVE COVER	1	
26	B4006310	GUIDE PIN	3	
27	B4006320	AIR BREATHER COVER	2	
28	B3206340	TOOL PIN	2	
29	B3006350	BUSHING PIN	4	
30	B3206360	UPPER BUSHING PIN	1	

NO	PART NO.	PART NAME	Q'TY	REMARK
31	B3206840	TOOL BUSHING	1	
32	B3007040	MEMBRANE	1	
33	B4006370	ACC. GUIDE PIN	1	
34	B3206380	TOOL - CONE	1	
35	B3206390	TOOL - CHISEL	1	
36	B3206400	TOOL - BLUNT	1	
37	B3206620	TOOL - MOIL	1	
38	B6006910	NEEDLE VALVE HOUSING	1	
39	B6006920	NEEDLE VALVE SPOOL	1	
40	B6006930	NUT	2	
41	B4006220	CHECK VALVE SPOOL	1	
42	B4006230	CHECK V/V SPRING GUIDE	1	
43	SB2215075	ACC. BOTTOM BOLT	12	
44	B4006420	ACC. GAS BOLT	1	
45	SB1420040	FLANGE BOLT (OUT)	4	
46	NLW16000	NORDLOCK WASHER	4	
47	SB12175040	FLANGE BOLT (IN)	4	
48	B4006450	HEX. SOCKET PLUG	6	
49	HB2015045	SLEEVE COVER BOLT	12	
50	CW200000	WASHER	12	
51	B4006480	CHECK VALVE SPRING	1	
52	B4006490	LOCK RING	1	
53	HB1620040	OPER. VALVE COVER BOLT	4	
54	CW160000	WASHER	4	
55	B4006520	HEX. SOCKET PLUG	1	
56	B2506530	HEX. SOCKET PLUG	2	
57	B4006530	HEX. SOCKET PLUG	1	
58	B2506870	OPER. VALVE SPRING	1	
59	SB1015025	AIR BREATHER COVER BOLT	8	
60	B4006560	GREASE NIPPLE	2	

NO	PART NO.	PART NAME	Q'TY	REMARK
61	B3006570	SNAP RING	4	
62	B3006580	RUBBER PLUG	4	
63	B1806570	SNAP RING	1	
64	B1806580	RUBBER PLUG	1	
65	SB1620040	SOCKET BOLT	4	
71	B4007010	ACCUMULATOR CAP	1	
72	B4007020	USIT-RING	1	
73	B3007030	RUBBER RING	4	
74	B4007050	O-RING	1	
75	B4007060	O-RING	1	
76	B4007070	O-RING	6	
77	B3007080	O-RING	1	
78	B3007090	BACKUP RING	1	
79	B6007190	O-RING	2	
80	B3207110	BACKUP RING	2	
81	B4007120	O-RING	2	
82	B3007100	O-RING	2	
83	B3207120	WIPER	1	
84	B3207130	U-PACKING	2	
85	B3207160	SEAL	1	
86	B3207170	WIPER	1	
87	B6007350	BACKUP RING	1	
88	B4007190	O-RING	2	
89	B4007200	O-RING	1	
90	B6007360	BACKUP RING	1	
91	B4007220	O-RING	1	
92	B6007370	BACKUP RING	1	
93	B4007240	O-RING	1	
94	B3007250	O-RING	4	

NO	PART NO.	PART NAME	Q'TY	REMARK
95	B4007270	O-RING	1	
96	B4007280	BACKUP RING	1	
97	B2507200	O-RING	1	
98	B4007310	O-RING	5	
99	B4007260	O-RING	1	
100	B3206940	BACKUP RING	1	
101	B3207180	O-RING	1	

HAMMEROC Corp.

14749 Carmenita Road
Norwalk, CA90650 U.S.A
TEL : 562-926-2014 FAX : 562-926-9614
E-mail : sales@hammeroc.com
Web Site : www.hammeroc.com
Toll Free : 866-255-7774